LBL-33448
UC-414

Lawrence Berkeley Laboratory

UNIVERSITY OF CALIFORNIA

Physics Division

Quantum Harmonic Brownian Motion in a General Environment: A Modified Phase-Space Approach

L. Yeh
(Ph.D. Thesis)

June 1993

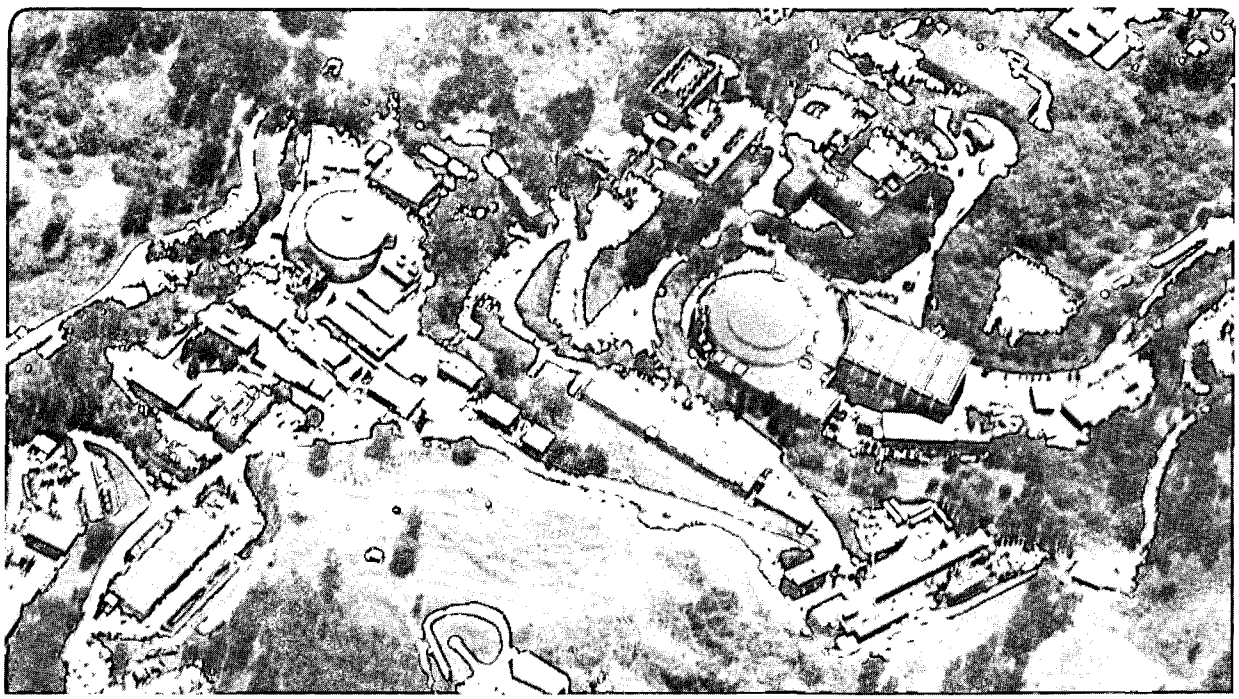

LOAN COPY
Circulates
for 4 weeks
Bldg. 50 Library.
Copy 2
LBL-33448

Prepared for the U.S. Department of Energy under Contract Number DE-AC03-76SF00098

DISCLAIMER

This document was prepared as an account of work sponsored by the United States Government. While this document is believed to contain correct information, neither the United States Government nor any agency thereof, nor the Regents of the University of California, nor any of their employees, makes any warranty, express or implied, or assumes any legal responsibility for the accuracy, completeness, or usefulness of any information, apparatus, product, or process disclosed, or represents that its use would not infringe privately owned rights. Reference herein to any specific commercial product, process, or service by its trade name, trademark, manufacturer, or otherwise, does not necessarily constitute or imply its endorsement, recommendation, or favoring by the United States Government or any agency thereof, or the Regents of the University of California. The views and opinions of authors expressed herein do not necessarily state or reflect those of the United States Government or any agency thereof or the Regents of the University of California.

June 23, 1993

LBL–33448
UCB–PTH–93/01

Quantum Harmonic Brownian Motion in a General Environment: A Modified Phase-Space Approach *

Ph. D. Thesis

Leehwa Yeh

Department of Physics
University of California
and
Theoretical Physics Group
Physics Division
Lawrence Berkeley Laboratory
University of California
Berkeley, CA 94720

*This work was supported in part by the Director, Office of Energy Research, Office of High Energy and Nuclear Physics, Division of High Energy Physics of the U.S. Department of Energy under Contract DE-AC03-76SF00098 and in part by the National Science Foundation under grant PHY-90-21139.

Abstract

After extensive investigations over three decades, the linear-coupling model and its equivalents have become the standard microscopic models for quantum harmonic Brownian motion, in which a harmonically bound Brownian particle is coupled to a quantum dissipative heat bath of general type modeled by infinitely many harmonic oscillators. The dynamics of these models have been studied by many authors using the quantum Langevin equation, the path-integral approach, quasi-probability distribution functions (e.g., the Wigner function), etc. However, the quantum Langevin equation is only applicable to some special problems, while other approaches all involve complicated calculations due to the inevitable reduction (i.e., contraction) operation for ignoring/eliminating the degrees of freedom of the heat bath.

In this dissertation, I propose an improved methodology via a modified phase-space approach which employs the characteristic function (the symplectic Fourier transform of the Wigner function) as the representative of the density operator. This representative is claimed to be the most natural one for performing the reduction, not only because of its simplicity but also because of its manifestation of geometric meaning. Accordingly, it is particularly convenient for studying the time evolution of the Brownian particle with an arbitrary initial state. The power of this characteristic function is illuminated through a detailed study of several physically interesting problems, including the environment-induced damping of quantum interference, the exact quantum Fokker–Planck equations, and the relaxation of non-factorizable initial states. All derivations and calculations are shown to be much simplified in comparison with other approaches.

In addition to dynamical problems, a novel derivation of the fluctuation-dissipation theorem which is valid for all quantum linear systems is presented. With the help of this theorem, the mechanism of this model is examined and the correspondence with classical phenomenological theories is discussed.

Contents

List of Figures vii

Introduction viii

Acknowledgements xiv

I General Theories 1

1 Mathematical Preliminaries 2

1.1 Notations and Conventions 2

1.2 Symplectic Algebra and Group 5

1.2.1 Inhomogeneous Symplectic Group 5

1.2.2 Weyl-metaplectic Group 6

1.2.3 Diagonalization by Symplectic Congruence Transformations 8

1.3 The Weyl Operator and the Wigner Operator 9

1.3.1 Squeezed Coherent States and the Weyl Operator 9

1.3.2 The Parity Operator and the Wigner Operator 11

1.3.3 Trace and Pseudo-trace of Operators 12

1.4 Stochastic Processes 13

1.4.1 Definitions and Theorems 13

1.4.2 Stochastic Differential Equations 17

2 Classical Theories of Brownian Motion 18

2.1 Historical Remarks 18

2.2 Einstein–Smoluchowski Theory 19

2.3 Wiener Process and White Noise 21
2.4 Langevin–Ornstein–Uhlenbeck Theory 21
2.5 Generalized Langevin Equation 24
2.6 Fokker–Planck Equation 26

3 Representatives of Density Operators **30**
3.1 Definitions of the Representatives 31
3.1.1 Coordinate Representation 31
3.1.2 Wigner Function 31
3.1.3 Characteristic Function 32
3.2 Transformations among the Representatives 33
3.3 Mean Vectors and Covariance Matrices 34
3.4 Gaussian States 35
3.5 Thermal States 36

4 Phase-Space Approach to Quantum Mechanics **39**
4.1 Weyl Symbols and the Weyl–Wigner Correspondence 40
4.2 Characteristic Symbols 41
4.3 Time Evolution of the Wigner and Characteristic Functions 43
4.4 Time Evolution of the Mean Vectors and the Covariance Matrices 45

5 Reduction of Density Operators **46**
5.1 General Theory 46
5.2 Reduction of a Density Operator via Its Representatives 47
5.3 Reduction of the Gaussian States 47
5.4 Time Evolution of the Reduced Density Operators 48

II The Model **50**

6 Equations of Motion and the Solutions **51**
6.1 The Model Hamiltonians 51
6.2 Classical Equations of Motion 52
6.3 Solutions of the Classical Equations of Motion 55

6.4 Linear Responses and the Generalized Susceptibility 59

7 Thermal Equilibrium State **63**

7.1 Diagonalization of the Model Hamiltonian 63

7.2 Phase Flow of the Classical System 64

7.3 Correlation Functions of the Brownian Particle 65

7.4 Fluctuation-Dissipation Theorem 68

7.5 Thermal Equilibrium State of the Brownian Particle 70

8 Quantum Langevin Equation **74**

8.1 Spectral Density 74

8.2 Quantum Dissipative Heat Bath 76

8.3 Quantum Noise 78

8.4 Quantum Langevin Equation 81

8.5 Ohmic Dissipation 82

III The Dynamics **85**

9 General Formulations **86**

9.1 Time Evolution of the Brownian Particle 86

9.2 Two General Relations 87

10 Factorizable Initial States **89**

10.1 Time Evolution: General Formulation 89

10.2 Approach to Equilibrium 91

10.3 Time Evolution of the Gaussian States and the Covariance Matrices of Arbitrary Initial States 93

10.4 Environment-Induced Damping of Quantum Interference 94

10.5 Quantum Fokker–Planck Equations 99

11 Non-factorizable Initial States **105**

11.1 Perturbed Thermal State: General Formulation 105

11.2 Localized Thermal State 109

11.3 Thermal Squeezed Coherent State 112
11.4 Displaced Thermal State 115

Conclusion and Outlook **118**

Bibliography **122**

List of Figures

6.1 Mechanical analogue of the independent-oscillator model 53
6.2 Graphical method for determining the roots of Eq. (6.27) 57

Introduction

In the past ten years, there has been a great deal of renewed interest in the dissipative mechanism of quantum open systems. This resurgence is motivated by the possible observations of macroscopic quantum phenomena in quantum optics (coherent and squeezed states) [34, 106], quantum non-equilibrium statistical mechanics (low-temperature and strong-damping anomalies) [44, 45], quantum measurement (quantum tunneling and Schrödinger's cat in SQUID) [11, 13], and quantum gravity as well as quantum cosmology (quantum-to-classical transition) [54, 107], etc. Among the problems of quantum open systems, quantum Brownian motion is a paradigm since the corresponding classical phenomenological theories are well established. The original Brownian motion refers to a heavy "Brownian particle" moving in a viscous fluid; today this term indicates the time evolution of any macroscopic degree of freedom under the influence of a dissipative heat bath (or "environment" for short).

For a closed (i.e., isolated) quantum system with a given Hamiltonian or Lagrangian, the time evolution of physical states can be studied from first principles of quantum mechanics, e.g., the Schrödinger equation. However, until now there has not been a fundamental theory for quantum open systems. Existing theories fall into the following three categories:

(I) New quantum theories with non-standard quantization rules, e.g., stochastic quantization, complex canonical variables, and several kinds of non-linear Schrödinger equations [20].

(II) (Semi-) phenomenological theories, which start with a model Hamiltonian and employ the Markovian approximation to derive a quantum master equation as the equation of motion for the density operator of the open system. The quantum Fokker–Planck equation usually serves as a c-number representation of the master equation. The quan-

tum Langevin equation (in the Heisenberg picture) is also derivable from the model Hamiltonian hence is equivalent to the quantum master equation and the quantum Fokker–Planck equation [4, 19, 65].

(III) Microscopic-model approach, which deals with an explicitly defined model Hamiltonian for the "total system" (the open system and the environment as well as their interactions). A necessary condition for the model Hamiltonian is that, with certain conditions imposed, the appropriate classical limits of the open system may be recovered. This approach has become more and more popular recently since it allows us to study quantum dynamics at arbitrarily low temperature and/or with strong damping, and the model environment can be of general dissipative character (ohmic, sub-ohmic, or supra-ohmic). Because the model Hamiltonian contains the degrees of freedom of both the open system and the environment, and only the open system is of interest, a reduction (i.e., contraction) operation is necessary in order to ignore or eliminate the details, and only keep the influence of the environment. Coarse graining, one of the fundamental principles in statistical mechanics, is manifested by this reduction operation in the microscopic-model approach.

In the following, we shall discuss in detail the microscopic-model approach to quantum harmonic Brownian motion, where the open system is a harmonically bound Brownian particle. Just as the quantum Brownian particle is the paradigm of quantum open systems, quantum harmonic Brownian motion is a paradigm among all quantum Brownian motions. For quantum harmonic Brownian motion, the simplest and most successful microscopic model is the linear-coupling model [10, 16, 22, 25, 40, 44, 45, 48, 73, 76, 85, 95], in which the environment is modeled by an infinite set of harmonic oscillators linearly coupled to the Brownian particle. In the literature, there are several equivalent formalisms for studying microscopic models, the most oft-used ones are the quantum Langevin equation, the (orthodox) phase-space approach, and the path-integral approach, among them the first is in the Heisenberg picture and the other two are in the Schrödinger picture.

(i) Quantum Langevin equation: This is similar to the phenomenological quantum Langevin equation, but all parameters and coefficients of this equation are explicitly and

exactly defined [8, 22, 28, 30, 63]. As we will discuss in Chap. 8, the applicability of this quantum Langevin equation is limited to some special problems.

(ii) Phase-space approach: This approach employs the quasi-probability (quantum) phase-space distribution functions as the representatives of the density operators of the total system as well as the Brownian particle. In the classical regime these distribution functions behave like classical distribution functions over the phase space, among them the Wigner function [47, 101] is the most studied. As long as the Hamiltonian is (inhomogeneously) quadratic, i.e., the quantum system is linear, the time evolution of these distribution functions is completely determined by the classical phase flow. Hence in this approach the classical-quantum correspondence is most clear. The phase-space approach to quantum harmonic Brownian motion has a long history [95], but has mainly been applied to ohmic dissipation.

(iii) Path-integral approach: The path-integral (or functional-integral) description of quantum open systems was pioneered by R. Feynman and F. Vernon in the early 1960's [25, 26], and was modified by A. Caldeira and A. Leggett twenty years later [10]. The applicability of this approach was first limited due to the factorization assumption for the initial condition introduced by Feynman and Vernon, where the initial quantum states of the Brownian particle and the environment are independent of each other. Since this factorization is not practical from the experimental point of view, it is more reasonable to consider non-factorizable initial states. Generalization of the path-integral approach to include non-factorizable initial states has been successfully accomplished during the past few years [40, 85].

In the literature, in addition to the above three formalisms, there have been other equivalent formalisms for quantum (harmonic) Brownian motion. They employ the projection operator [37, 69], the continued-fraction expression [89], the closed-time-path integral (closed-time Green's function) [16, 83, 87], etc.

In the path-integral approach, the so-called influence functional, which can be calculated systematically for a given model Hamiltonian, carries information about the environmental influence on the Brownian particle after reduction. Due to its systematic calculational nature, the path-integral approach soon became the standard microscopic-

model approach to quantum Brownian motion. Many physically interesting problems have been studied using this approach, and several generalizations have been proposed [16, 17, 40, 49, 85]. It is widely believed nowadays that this approach is the best, if not the only one for dealing with quantum (harmonic) Brownian motion in a general environment. In contrast, the phase-space approach seems obsolete in the 1990's.

The aim of this dissertation is to introduce a modified phase-space approach to quantum harmonic Brownian motion, which is claimed to be more efficient than both the orthodox phase-space approach and the path-integral approach. Before introducing this novel approach, let us first take a closer look at the limitations and difficulties of those conventional approaches.

For the microscopic-model approaches to quantum Brownian motion, the reduction usually involves complicated calculations, especially with respect to the non-factorizable initial states, since the total number of the environmental degrees of freedom is essentially infinite. The only exception is in the quantum Langevin equation approach, where the reduction is done by eliminating the degrees of freedom of the heat-bath oscillators from the Heisenberg equation of motions [22, 28, 30]. But the price paid is the limitation of its applicability.

Since the complexity of microscopic-model approaches is mainly due to the reduction operation, the calculations promise to be simplified if we can find an appropriate representative. In the literature, a few authors have noticed that the characteristic function, which is the symplectic (or double) Fourier transform of the Wigner function, is the most suitable representative for the reduction operation [33, 43, 96]. (Since the Wigner function is a quantum analogue of the probability density function, its symplectic Fourier transform is called the characteristic function by analogy to probability theory.) The characteristic function is not a quasi-probability distribution function and hence has no direct physical meaning even in the classical limits. However, as we will show in Chap. 5, it gives an illuminating geometric meaning to the reduction operation in phase space.

In the modified phase-space approach, the characteristic function takes the place of the traditional Wigner function as the representative of the density operator. In the following, it will be shown through many practical examples that quantum harmonic Brownian motion in a general environment can be studied with great efficiency in this

modified phase-space approach.

This dissertation consists of three main parts: Part I (Chap. 1–5) contains a review of all related general theories, Part II (Chap. 6–8) discusses the mechanism and validity of the model, and Part III (Chap. 9–11) formulates the dynamics of quantum harmonic Brownian motion via the modified phase-space approach. The organization is as follows:

Chap. 1 formulates all necessary mathematics. Chap. 2 gives a review of classical theories of Brownian motion. Chap. 3 studies three different representatives of the density operator: the coordinate representation, the Wigner function, and the characteristic function. The first two are the conventional representatives for quantum Brownian motion, and the third one is the representative to be used in our modified phase-space approach. Chap. 4 reviews the phase-space approach to quantum mechanics, i.e., the Weyl–Wigner–Moyal formalism. Aspects of similarity and the contrast between the Wigner function and the characteristic function are discussed. Chap. 5 investigates the general theory of reduction. The advantage of using the characteristic function in performing reduction is shown through explicit formulas.

In Chap. 6, we derive and solve the classical as well as quantum equations of motion for the position of the Brownian particle. All results in this chapter are useful for the subsequent discussion, among which the fundamental solution (the Green's function) and generalized susceptibility are of special importance. In Chap. 7, we study the thermal (equilibrium) state of the model system. A novel derivation of the fluctuation-dissipation theorem for this model, which is valid for all quantum linear systems, is proposed. Using the fluctuation-dissipation theorem, without diagonalizing the model Hamiltonian, we are able to calculate the correlation functions of the Brownian particle from the results of dynamical problems in the previous chapter. The explicit form of the thermal equilibrium state of the Brownian particle, which is defined as a reduced state of the thermal state of the total system, is consequently obtained. In Chap. 8, we begin to take the thermodynamic limit and construct the quantum dissipative heat bath model by specifying the spectral density. The quantum Langevin equation for the position operator of the Brownian particle is constructed explicitly, and from it the validity of the model is verified.

In Chap. 9, general formulations of the time evolution of the Brownian particle from an arbitrary initial state in terms of the characteristic function are summarized. The results are then applied to the following two chapters: Chap. 10 studies the dynamics of the Brownian particle with factorizable initial states, which covers many important results previously obtained via the path-integral approach in the literature; Chap. 11 analyzes the time evolution of non-factorizable initial states, with three explicitly solved examples following the general formulation.

Finally, several possible generalizations of this modified phase-space approach are discussed in the Conclusion and Outlook.

Acknowledgements

First of all, I would like to express my sincere gratitude to my advisor, Professor Geoffrey Chew, for his support, care, guidance, and especially for the infinite degrees of freedom he provides.

Several other professors have contributed their time graciously on my behalf: I am indebted to Professor Eyvind Wichmann for his great patience and for teaching me how to distinguish physics from mathematics. I would also like to thank Professor Alberto Grünbaum for encouraging me to make an extensive study of classical Brownian motion which gave me a chance to comprehend the difference between chance and necessity. In the preparation of this dissertation, I have benefited significantly from the advice of Dr. Henry Stapp and Professor Jerry Finkelstein. Many discussions with them have generated enlightening ideas and kept my work on the right track.

I am grateful to many people who made my life at Berkeley easier. In particular, Ms. Anne Takizawa, Ms. Betty Moura, and Ms. Luanne Neumann, who have always done their best to assist me with those tedious administrative tasks. A special note of appreciation must go to Mr. Richard Robinson, the nicest librarian I have ever met.

I wish to express my thanks to Dr. Charles Lineweaver and Dr. Kenneth Koziol for devoting their time to proofreading the draft. I also gratefully acknowledge Dr. Max Tegmark for plotting the graphs, and Dr. Jyh–Shing Jang in the EECS department for guiding me in the general format of this dissertation.

During my graduate studies, I also devoted myself to modern Chinese literature both as an editor and as an amateur writer. Very fortunately, this gave me the opportunity to become acquainted with many famous authors living in Taiwan, Hong Kong, and the United States. I cherish their friendship very much.

As an only child, I have enjoyed the endless love of my parents and grandmother ever since I was born. To them I dedicate this dissertation with pride.

Part I

General Theories

Chapter 1

Mathematical Preliminaries

1.1 Notations and Conventions

Throughout this paper the Boltzmann constant k_B is set equal to unity and β^{-1} denotes the temperature, with $\hbar = 1$ unless otherwise specified. The symbol $*$ denotes complex conjugate, $\dagger$ denotes Hermitian conjugate, $\top$ denotes transpose of a matrix, and $-\top$ denotes inverse of the transpose of a matrix. Wherever ϵ appears, it is understood that the limit $\epsilon \to 0^+$ has been taken.

The physical system under consideration is an N-mode system, which contains exactly $N = (n+1)$ coupled harmonic oscillators, among which the 0-th mode corresponds to the one-dimensional Brownian particle and the other n modes to the heat bath. The indices or subscripts i and j always run from 0 to n, while ℓ runs from 1 to n. The subscript for the 0-th mode, i.e., the Brownian particle, will be dropped if there is no ambiguity.

We use $\boldsymbol{x} = (x, x_1, x_2, \cdots, x_n)$ and $\boldsymbol{k} = (k, k_1, k_2, \cdots, k_n)$ to denote the N-dimensional canonical coordinate and momentum, respectively, and $\hat{\boldsymbol{q}}$ and $\hat{\boldsymbol{p}}$ for the N-dimensional position and momentum operators corresponding to $\boldsymbol{x}$ and $\boldsymbol{k}$. The canonical commutation relations are

$$[\hat{q}_i, \hat{q}_j] = [\hat{p}_i, \hat{p}_j] = 0, \quad [\hat{q}_i, \hat{p}_j] = i\delta_{ij}\hat{\mathbf{1}}, \tag{1.1}$$

where $\hat{\mathbf{1}}$ is the identity operator. The Hilbert space upon which these operators act is the tensor product of the Hilbert space corresponding to each of the quantum harmonic

oscillators of the system. Note that we shall never employ creation or annihilation operators in this paper.

We then use $\boldsymbol{z} = (\boldsymbol{x}, \boldsymbol{k})$ to denote a row vector in the $2N$-dimensional phase space, and use $\hat{\boldsymbol{r}} = (\hat{\boldsymbol{q}}, \hat{\boldsymbol{p}})$ for the operator-valued vector corresponding to $\boldsymbol{z}$. Following this convention, we shall always use the lower case, bold-faced letters to denote the row vectors unless otherwise specified. These row vectors work as the row matrices in matrix multiplications. The two-dimensional phase space spanned by (x, k), the canonical coordinate and momentum of the Brownian particle, will be called the Brownian phase plane.

To each harmonic oscillator of the system we assign a characteristic mass m_j and a characteristic frequency $\omega_j > 0$, so that it acquires a characteristic length $(m_j\omega_j)^{-\frac{1}{2}}$. The $2N \times 2N$ scale matrix g is defined accordingly as

$$\mathsf{g} = \mathrm{diag}\Big\{m_0\omega_0, m_1\omega_1, \cdots, m_n\omega_n, \frac{1}{m_0\omega_0}, \frac{1}{m_1\omega_1}, \cdots, \frac{1}{m_n\omega_n}\Big\}. \tag{1.2}$$

This g is a symplectic matrix since it satisfies

$$\mathsf{g}^{\mathsf{T}}\mathsf{J}\mathsf{g} = \mathsf{J}, \quad \text{and} \quad \det(\mathsf{g}) = 1, \tag{1.3}$$

where

$$\mathsf{J} = \begin{pmatrix} \mathbf{0} & \mathsf{I}_N \\ -\mathsf{I}_N & \mathbf{0} \end{pmatrix} \quad (\mathsf{I}_N = N \times N \text{ unit matrix}) \tag{1.4}$$

is the $2N \times 2N$ metric matrix in a $2N$-dimensional symplectic vector space with the following properties:

$$\mathsf{J}^{-1} = \mathsf{J}^{\mathsf{T}} = -\mathsf{J}. \tag{1.5}$$

The 2×2 matrix g_j is a submatrix of the scale matrix g defined as

$$\mathsf{g}_j = \begin{pmatrix} m_j\omega_j & 0 \\ 0 & (m_j\omega_j)^{-1} \end{pmatrix}, \tag{1.6}$$

and the 2×2 analogue of the metric matrix J is denoted by

$$\mathsf{j} = \begin{pmatrix} 0 & 1 \\ -1 & 0 \end{pmatrix}. \tag{1.7}$$

The elements of every $2N\times 2N$ matrix are labeled by the indices $0, 1, \ldots\ldots, (2N-1)$, e.g., the upper-left element is $(0,0)$ and the lower-right element is $(2N-1, 2N-1)$. For

a given $2N \times 2N$ matrix M, the matrix $[\![\mathsf{M}]\!]$ is a 2×2 submatrix of M defined as

$$[\![\mathsf{M}]\!] = \begin{pmatrix} \mathsf{M}_{oo} & \mathsf{M}_{oN} \\ \mathsf{M}_{No} & \mathsf{M}_{NN} \end{pmatrix}, \tag{1.8}$$

hence

$$[\![\mathsf{JM}]\!] = \mathsf{j}\,[\![\mathsf{M}]\!], \text{ etc.} \tag{1.9}$$

The Heaviside unit step function $\theta(\omega)$ is defined as

$$\theta(\omega) = \begin{cases} 1, & \omega \geq 0; \\ 0, & \omega < 0. \end{cases} \tag{1.10}$$

The Dirac delta function of X is denoted by $\delta(X)$, where X can be either a scalar or a vector variable. Since $\delta(t)$ is symmetric with respect to $t=0$ for a scalar t, we have

$$\int_0^{\Lambda} dt\,\delta(t)\chi(t) = \tfrac{1}{2}\chi(0), \tag{1.11}$$

where $\Lambda > 0$, and $\chi(t)$ is an arbitrary function of t.

For dynamical problems, the initial conditions are always chosen with respect to time $t = 0$. The symbol $\dot{X}$ denotes the time derivative of X, etc. The (asymmetric) Fourier transform of $f(t)$ in the time domain to $F(\omega)$ in the frequency domain is defined according to the convention in linear response theory:

$$F(\omega) = \int_{-\infty}^{+\infty} dt\,\exp(i\omega t) f(t), \tag{1.12}$$

hence the inverse transform is

$$f(t) = \frac{1}{2\pi}\int_{-\infty}^{+\infty} d\omega\,\exp(-i\omega t) F(\omega), \tag{1.13}$$

and we say that $f(t)$ and $F(\omega)$ form a Fourier transform pair.

The Laplace transform of $f(t)$ is defined as

$$\mathcal{L}_s\{f(t)\} = \bar{f}[s] = \int_0^{\infty} dt\,\exp(-st) f(t), \tag{1.14}$$

where s is a complex variable with $\mathrm{Re}(s)$ bounded from below. The Fourier–Laplace transform of $f(t)$ is defined as the Laplace transform of $f(t)$ with $s = -i\omega$.

In contrast to using $\hat{O}$ for an operator, the notation $\breve{W}$ will be used for a random variable. Therefore $\langle \breve{W} \rangle$ denotes the expectation value of the random variable $\breve{W}$ with

respect to a probability density, which is analogous to $\langle \hat{O} \rangle$ for the expectation value of the operator $\hat{O}$ with respect to a quantum state. If it is necessary, a subscript will follow the bracket $\langle \ \rangle$ to specify the probability density or the quantum state.

All integral formulas used in this paper can be found in [41]. For improper integrals, the symbol Pr indicates the Cauchy principal value.

1.2 Symplectic Algebra and Group

1.2.1 Inhomogeneous Symplectic Group

We adopt the definition of canonical transformations as transformations which preserve the Poisson brackets [5, 36] of the canonical variable $\boldsymbol{z}$ defined in Sec. 1.1. According to this definition, the linear canonical transformation contains the following two transformations as special cases:

(1) Translation in phase space:

$$\boldsymbol{z} \longmapsto \boldsymbol{z} - \boldsymbol{z}_c, \tag{1.15}$$

where $\boldsymbol{z}_c$ is a constant vector in the $2N$-dimensional phase space. The group corresponding to this transformation is the translation group $\mathbf{T}(2N)$. It is a $2N$-dimensional Abelian Lie group.

(2) Symplectic transformation:

$$\boldsymbol{z}^{\mathsf{T}} \longmapsto \mathsf{M}\boldsymbol{z}^{\mathsf{T}}, \tag{1.16}$$

where M is a $2N \times 2N$ real symplectic matrix that satisfies $\mathsf{M}^{\mathsf{T}}\mathsf{J}\mathsf{M} = \mathsf{J}$. The group which corresponds to this transformation is the symplectic group and is denoted by $\mathbf{Sp}(2N, \mathbf{R})$ [32]. It is an $N(2N+1)$-dimensional Lie group.

It is obvious that the combination of the above two transformations gives the most general linear canonical transformations in the $2N$-dimensional phase space, and the corresponding group is the semi-direct product of $\mathbf{T}(2N)$ and $\mathbf{Sp}(2N, \mathbf{R})$, which is usually denoted by $\mathbf{T}(2N) \otimes_s \mathbf{Sp}(2N, \mathbf{R})$. We will call this group the inhomogeneous symplectic group and denote it by $\mathbf{ISp}(2N, \mathbf{R})$. The action of $\mathbf{ISp}(2N, \mathbf{R})$ on $\boldsymbol{z}$ is the general linear canonical transformation defined according to

$$\boldsymbol{z}^{\mathsf{T}} \longmapsto \mathsf{M}(\boldsymbol{z} - \boldsymbol{z}_c)^{\mathsf{T}}. \tag{1.17}$$

If we take the scale of each mode into account, it is convenient to decompose M into

$$\mathsf{M} = \mathbf{g}^{-\frac{1}{2}}\mathsf{S}\mathbf{g}^{\frac{1}{2}}. \tag{1.18}$$

Since $\mathbf{g}$ is a symplectic matrix, so are $\mathbf{g}^{\frac{1}{2}}$, $\mathbf{g}^{-\frac{1}{2}}$, and hence S.

1.2.2 Weyl-metaplectic Group

According to the canonical commutation relations (1.1), the vector space spanned by $\{\hat{\mathbf{1}}, \hat{q}_i, \hat{p}_j, \hat{q}_i\hat{q}_j, \hat{p}_i\hat{p}_j, \hat{q}_i\hat{p}_j + \hat{p}_j\hat{q}_i\}$ is a Lie algebra. It will be shown below that the group of unitary operators corresponding to this Lie algebra is the quantum analogue of $\mathbf{ISp}(2N, \mathbf{R})$.

First, we shall study the quantum analogue of $\mathbf{T}(2N)$. It is a $(2N+1)$-dimensional Lie group of unitary operators with its algebra spanned by $\{\hat{\mathbf{1}}, \hat{q}_i, \hat{p}_j\}$, i.e., the Weyl (or Weyl–Heisenberg) algebra. We will call this group the Weyl group and denote it by $\mathbf{W}(2N)$. It is a central extension of the Abelian group $\mathbf{T}(2N)$ [88].

The elements of $\mathbf{W}(2N)$ are the unitary operators with the form

$$\hat{T}(\theta, \boldsymbol{z}_c) = \exp\left\{i\theta\hat{\mathbf{1}} + i\hat{\boldsymbol{r}}\mathsf{J}\boldsymbol{z}_c^{\mathsf{T}}\right\}, \tag{1.19}$$

where θ is a real number and $\boldsymbol{z}_c$ is the same constant vector as in (1.15). The action of $\hat{T}(\theta, \boldsymbol{z}_c)$ on $\hat{\boldsymbol{r}}$ is defined according to

$$\hat{T}(\theta, \boldsymbol{z}_c)\,\hat{\boldsymbol{r}}\,\hat{T}^{\dagger}(\theta, \boldsymbol{z}_c) = \hat{\boldsymbol{r}} - \boldsymbol{z}_c. \tag{1.20}$$

This operation is formally isomorphic to (1.15), the translation in phase space made by the group $\mathbf{T}(2N)$. Therefore we obtain the following group isomorphism:

$$\mathbf{W}(2N)/\{\exp(i\theta\hat{\mathbf{1}})\} \cong \mathbf{W}(2N)/\mathbf{U}(1) \cong \mathbf{T}(2N). \tag{1.21}$$

Next, we study the quantum analogue of $\mathbf{Sp}(2N, \mathbf{R})$. It is an $N(2N+1)$-dimensional Lie group of unitary operators with its algebra spanned by $\{\hat{q}_i\hat{q}_j, \hat{p}_i\hat{p}_j, \hat{q}_i\hat{p}_j + \hat{p}_j\hat{q}_i\}$. We shall show that this Lie algebra is isomorphic to $\mathbf{sp}(2N, \mathbf{R})$—the Lie algebra of $\mathbf{Sp}(2N, \mathbf{R})$, and thus the group acquires the name metaplectic group $\mathbf{Mp}(2N, \mathbf{R})$ [27, 64, 92]. The elements of the Lie algebra of $\mathbf{Mp}(2N, \mathbf{R})$ are the anti-Hermitian operators

of the form

$$\begin{aligned}\hat{\Psi}(\mathsf{m}) &\equiv \frac{i}{2}(\hat{q},\hat{p})\mathbf{g}^{\frac{1}{2}}\begin{pmatrix}\mathsf{a} & \mathsf{c}\\ \mathsf{c}^{\mathsf{T}} & \mathsf{b}\end{pmatrix}\mathbf{g}^{\frac{1}{2}}(\hat{q},\hat{p})^{\mathsf{T}}\\ &\equiv \tfrac{i}{2}\hat{r}\,\mathbf{g}^{\frac{1}{2}}\mathsf{J}\mathsf{m}\,\mathbf{g}^{\frac{1}{2}}\hat{r}^{\mathsf{T}}\\ &= \tfrac{i}{2}\hat{r}\mathsf{J}\mathbf{g}^{-\frac{1}{2}}\mathsf{m}\,\mathbf{g}^{\frac{1}{2}}\hat{r}^{\mathsf{T}},\end{aligned} \tag{1.22}$$

where a and b are $N\times N$ symmetric real matrices, and

$$\mathsf{m} = \begin{pmatrix}-\mathsf{c}^{\mathsf{T}} & -\mathsf{b}\\ \mathsf{a} & \mathsf{c}\end{pmatrix} \in \mathbf{sp}(2N,\mathbf{R}) \tag{1.23}$$

is a $2N\times 2N$ real matrix [32]. Introducing the scale matrix $\mathbf{g}$ is necessary since we have to distinguish squeezed states from coherent states in the following discussion. Note that $\mathbf{g}^{-\frac{1}{2}}\mathsf{m}\,\mathbf{g}^{\frac{1}{2}} \in \mathbf{sp}(2N,\mathbf{R})$.

From the canonical commutation relations, we have

$$\left[\hat{\Psi}(\mathsf{m}),\hat{r}^{\mathsf{T}}\right] = -\mathbf{g}^{-\frac{1}{2}}\mathsf{m}\,\mathbf{g}^{\frac{1}{2}}\hat{r}^{\mathsf{T}}, \tag{1.24}$$

and

$$\left[\hat{\Psi}(\mathsf{m}_1),\hat{\Psi}(\mathsf{m}_2)\right] = \hat{\Psi}\Big([\mathsf{m}_1,\mathsf{m}_2]\Big), \tag{1.25}$$

thus the Lie algebra of $\mathbf{Mp}(2N,\mathbf{R})$ is isomorphic to $\mathbf{sp}(2N,\mathbf{R})$.

The action of $\exp\{\hat{\Psi}(\mathsf{m})\} \in \mathbf{Mp}(2N,\mathbf{R})$ on $\hat{r}$ can be defined and calculated from (1.24) as

$$\exp\left\{\hat{\Psi}(\mathsf{m})\right\}\hat{r}^{\mathsf{T}}\exp\left\{-\hat{\Psi}(\mathsf{m})\right\} = \mathbf{g}^{-\frac{1}{2}}\exp(-\mathsf{m})\mathbf{g}^{\frac{1}{2}}\hat{r}^{\mathsf{T}}, \tag{1.26}$$

where $\exp(-\mathsf{m}) \in \mathbf{Sp}(2N,\mathbf{R})$, hence $\mathbf{g}^{-\frac{1}{2}}\exp(-\mathsf{m})\mathbf{g}^{\frac{1}{2}} \in \mathbf{Sp}(2N,\mathbf{R})$. Therefore this action induces an element in $\mathbf{Sp}(2N,\mathbf{R})$.

Let us next generalize (1.26) by replacing $\mathbf{g}^{-\frac{1}{2}}\exp(-\mathsf{m})\mathbf{g}^{\frac{1}{2}}$ in (1.26) by a general element M in $\mathbf{Sp}(2N,\mathbf{R})$ which is defined as in (1.18), we then try to find a unitary operator $\hat{S}(\mathsf{M})$ in $\mathbf{Mp}(2N,\mathbf{R})$ such that

$$\hat{S}(\mathsf{M})\,\hat{r}^{\mathsf{T}}\hat{S}^{\dagger}(\mathsf{M}) = \mathsf{M}\hat{r}^{\mathsf{T}} = \mathbf{g}^{-\frac{1}{2}}\mathsf{S}\,\mathbf{g}^{\frac{1}{2}}\hat{r}^{\mathsf{T}}. \tag{1.27}$$

From linear algebra and group theory, we know that there is a unique polar decomposition $\mathsf{S} = \mathsf{RP}$ for any element S of $\mathbf{Sp}(2N,\mathbf{R})$, where R is orthogonal, P is symmetric

and positive definite, and both R and P are in $\mathbf{Sp}(2N,\mathbf{R})$. Therefore we can always put $\mathsf{S}=\exp(\mathsf{m}_\mathsf{R})\exp(\mathsf{m}_\mathsf{P})$, where $\mathsf{R}=\exp(\mathsf{m}_\mathsf{R})$ and $\mathsf{P}=\exp(\mathsf{m}_\mathsf{P})$, and both m_R and m_P are elements of $\mathbf{sp}(2N,\mathbf{R})$ (m_P is symmetric and unique, while m_R is anti-symmetric and not unique) [64]. The element $\hat{S}(\mathsf{M})$ in $\mathbf{Mp}(2N,\mathbf{R})$ which is unitary and satisfies (1.27) can be constructed as

$$\hat{S}(\mathsf{M}) = \exp\left\{\hat{\Psi}(-\mathsf{m}_\mathsf{P})\right\}\exp\left\{\hat{\Psi}(-\mathsf{m}_\mathsf{R})\right\}. \tag{1.28}$$

However, among all elements of $\mathbf{Mp}(2N,\mathbf{R})$, there are exactly two which give the same matrix M in (1.27), i.e., $\pm\hat{S}(\mathsf{M})$. The reason that $-\hat{S}(\mathsf{M})$ also belongs to $\mathbf{Mp}(2N,\mathbf{R})$ is because of the following identity:

$$\exp\left\{i\pi(c\hat{q}_j^2 + c^{-1}\hat{p}_j^2)\right\} = -\hat{\mathbf{1}} \in \mathbf{Mp}(2N,\mathbf{R}), \tag{1.29}$$

where c is any non-zero real number. Hence we see that $\mathbf{Mp}(2N,\mathbf{R})$ is a doubly covering group of $\mathbf{Sp}(2N,\mathbf{R})$:

$$\mathbf{Mp}(2N,\mathbf{R})/\{\pm\hat{\mathbf{1}}\} \cong \mathbf{Sp}(2N,\mathbf{R}). \tag{1.30}$$

Now we are ready to define the group which corresponds to $\mathbf{ISp}(2N,\mathbf{R})$. It is the semi-direct product of $\mathbf{W}(2N)$ and $\mathbf{Mp}(2N,\mathbf{R})$, i.e., $\mathbf{W}(2N)\otimes_s\mathbf{Mp}(2N,\mathbf{R})$. We will denote this group by $\mathbf{WMp}(2N,\mathbf{R})$ and define its element as the unitary operator $\hat{T}(\theta,\boldsymbol{z}_c)\hat{S}(\mathsf{M})$. The transformation of $\hat{\boldsymbol{r}}$ under $\mathbf{WMp}(2N,\mathbf{R})$ is defined as

$$\left[\hat{T}(\theta,\boldsymbol{z}_c)\,\hat{S}(\mathsf{M})\right]\hat{\boldsymbol{r}}^\mathsf{T}\left[\hat{T}(\theta,\boldsymbol{z}_c)\hat{S}(\mathsf{M})\right]^\dagger = \mathsf{M}(\hat{\boldsymbol{r}}-\boldsymbol{z}_c)^\mathsf{T}, \tag{1.31}$$

which is formally isomorphic to (1.17).

1.2.3 Diagonalization by Symplectic Congruence Transformations

Theorem [93, 102]: If M is a symmetric and positive definite $2N\times 2N$ real matrix, then there exist two matrices $\mathsf{S}_1,\mathsf{S}_2\in\mathbf{Sp}(2N,\mathbf{R})$, such that

$$\mathsf{M} = \mathsf{S}_1^\mathsf{T}\begin{pmatrix}\boldsymbol{\Omega} & \mathbf{0}\\ \mathbf{0} & \boldsymbol{\Omega}\end{pmatrix}\mathsf{S}_1 = \mathsf{S}_2^\mathsf{T}\begin{pmatrix}\boldsymbol{\Omega}^2 & \mathbf{0}\\ \mathbf{0} & \mathsf{I}_N\end{pmatrix}\mathsf{S}_2, \tag{1.32}$$

where $\boldsymbol{\Omega}\equiv\mathrm{diag}\left\{\Omega_0,\Omega_1,\Omega_2,\cdots,\Omega_n\right\}$ with $\Omega_j>0$.

Remarks:

(1) $\mathsf{S} \in \mathbf{Sp}(2N, \mathbf{R})$ if and only if $\mathsf{S}^{\mathsf{T}}\mathsf{J}\mathsf{S} = \mathsf{J}$ by definition.

(2) Ω_j's are not eigenvalues of M in general. We will call them the "symplectic eigenvalues" of the matrix M.

(3) The eigenvalues of JM are $\pm i\Omega_j$'s, hence we can calculate the symplectic eigenvalues Ω_j's from JM as an ordinary eigenvalue problem.

(4) If the matrix C_j corresponds to a two-dimensional rotation on the (x_j, k_j) phase plane, then

$$\mathsf{C}_j^{\mathsf{T}} \begin{pmatrix} \mathbf{\Omega} & \mathbf{0} \\ \mathbf{0} & \mathbf{\Omega} \end{pmatrix} \mathsf{C}_j = \mathsf{C}_j^{\mathsf{T}} \mathsf{C}_j \begin{pmatrix} \mathbf{\Omega} & \mathbf{0} \\ \mathbf{0} & \mathbf{\Omega} \end{pmatrix} = \begin{pmatrix} \mathbf{\Omega} & \mathbf{0} \\ \mathbf{0} & \mathbf{\Omega} \end{pmatrix}. \tag{1.33}$$

Therefore S_1 in (1.32) can be replaced by $\mathsf{C}_j\mathsf{S}_1$ and is not unique.

(5) S_2 can be constructed from S_1 as

$$\mathsf{S}_2 = \begin{pmatrix} \mathbf{\Omega}^{-\frac{1}{2}} & \mathbf{0} \\ \mathbf{0} & \mathbf{\Omega}^{\frac{1}{2}} \end{pmatrix} \mathsf{S}_1, \tag{1.34}$$

hence S_2 is not unique either.

1.3 The Weyl Operator and the Wigner Operator

1.3.1 Squeezed Coherent States and the Weyl Operator

Let $|\mathbf{0}\rangle$ denote the direct product of the ground states of N independent harmonic oscillators with masses m_j and frequencies ω_j defined in Sec. 1.1. In the coordinate representation this ground state takes the form

$$\langle \boldsymbol{x}|\mathbf{0}\rangle = \prod_j \left[\left(\frac{m_j\omega_j}{\pi} \right)^{1/4} \exp\left\{ -\tfrac{1}{2} m_j \omega_j x_j^2 \right\} \right], \tag{1.35}$$

where $\boldsymbol{x}$ is a vector in the N-dimensional configuration space.

According to the theory of generalized coherent states [74, 106], we define the N-mode squeezed coherent state as the generalized coherent state corresponding to the group $\mathbf{WMp}(2N, \mathbf{R})$ with $|\mathbf{0}\rangle$ as the fiducial state:

$$\hat{T}(\theta, \boldsymbol{z}_c)\hat{S}(\mathsf{M})|\mathbf{0}\rangle, \tag{1.36}$$

where $\hat{T}(\theta, \boldsymbol{z}_c)\hat{S}(\mathsf{M})$ is an element of $\mathbf{WMp}(2N, \mathbf{R})$ as defined in Sec. 1.2.2. Since the fiducial state $|\mathbf{0}\rangle$ is invariant under the action of some elements of $\mathbf{WMp}(2N, \mathbf{R})$, the

squeezed coherent state defined above is equivalent to [66, 104]

$$\hat{D}(\boldsymbol{z}_c)\exp\{\hat{\Psi}(-\mathsf{m}_\mathsf{P})\}|\mathbf{0}\rangle = \hat{D}(\boldsymbol{z}_c)\hat{S}(\mathsf{g}^{-\frac{1}{2}}\exp(\mathsf{m}_\mathsf{P})\mathsf{g}^{\frac{1}{2}})|\mathbf{0}\rangle, \tag{1.37}$$

where $\hat{D}(\boldsymbol{z}_c)$ is called the Weyl operator (or the phase-space displacement operator):

$$\hat{D}(\boldsymbol{z}_c) \equiv \exp\Big\{i\hat{\boldsymbol{r}}\mathsf{J}\boldsymbol{z}_c^\mathsf{T}\Big\} = \exp\Big\{i(\boldsymbol{k}_c\cdot\hat{\boldsymbol{q}} - \boldsymbol{x}_c\cdot\hat{\boldsymbol{p}})\Big\}, \tag{1.38}$$

which is an element of $\mathbf{W}(2N)$ with $\theta=0$, and $\exp(\mathsf{m}_\mathsf{P})$ is a positive definite symmetric $2N\times 2N$ symplectic matrix.

As a special case of the N-mode squeezed coherent state defined above, the N-mode coherent state is defined as [34, 55, 81]:

$$|\boldsymbol{z}_c\rangle = \hat{D}(\boldsymbol{z}_c)|\mathbf{0}\rangle. \tag{1.39}$$

Because $\boldsymbol{z}_c$ is a vector in the $2N$-dimensional phase space, there is a one-to-one correspondence between $|\boldsymbol{z}_c\rangle$ in (1.39) and the phase space made of $\boldsymbol{z}_c$.

The set of coherent states $\{|\boldsymbol{z}\rangle \,|\, \boldsymbol{z}\in\mathbf{R}^{2N}\}$ forms an overcomplete basis of the Hilbert space for the total system because of the following resolution of the identity:

$$\int_{-\infty}^{+\infty} d^{2N}z|\boldsymbol{z}\rangle\langle\boldsymbol{z}| = (2\pi)^N\hat{\mathbf{1}}. \tag{1.40}$$

The following formulas are useful for later discussion:

$$\hat{D}^\dagger(\boldsymbol{z}) = \hat{D}^{-1}(\boldsymbol{z}) = \hat{D}(-\boldsymbol{z}), \tag{1.41}$$

$$\hat{D}(\boldsymbol{z})\hat{\boldsymbol{r}}\hat{D}(-\boldsymbol{z}) = \hat{\boldsymbol{r}} - \boldsymbol{z}, \tag{1.42}$$

$$\hat{D}(\boldsymbol{z}_1)\hat{D}(\boldsymbol{z}_2) = \hat{D}(\boldsymbol{z}_1+\boldsymbol{z}_2)\exp\Big\{-\tfrac{i}{2}\boldsymbol{z}_1\mathsf{J}\boldsymbol{z}_2^\mathsf{T}\Big\}, \tag{1.43}$$

$$\hat{D}(\boldsymbol{z}_1)\hat{D}(\boldsymbol{z}_2)\hat{D}(\boldsymbol{z}_3) = \hat{D}(\boldsymbol{z}_1+\boldsymbol{z}_2+\boldsymbol{z}_3)\exp\Big\{-\tfrac{i}{2}(\boldsymbol{z}_1\mathsf{J}\boldsymbol{z}_2^\mathsf{T}+\boldsymbol{z}_1\mathsf{J}\boldsymbol{z}_3^\mathsf{T}+\boldsymbol{z}_2\mathsf{J}\boldsymbol{z}_3^\mathsf{T})\Big\}, \tag{1.44}$$

$$\hat{D}(\boldsymbol{z}_1)\hat{D}(\boldsymbol{z}_2)\hat{D}(\boldsymbol{z}_1) = \hat{D}(2\boldsymbol{z}_1+\boldsymbol{z}_2), \tag{1.45}$$

$$\hat{D}(\boldsymbol{z}_1)\hat{D}(\boldsymbol{z}_2)\hat{D}(-\boldsymbol{z}_1) = \hat{D}(\boldsymbol{z}_2)\exp\Big\{-i\boldsymbol{z}_1\mathsf{J}\boldsymbol{z}_2^\mathsf{T}\Big\}, \tag{1.46}$$

$$\langle\mathbf{0}|\hat{D}(\boldsymbol{z})|\mathbf{0}\rangle = \exp\Big\{-\tfrac{1}{4}\boldsymbol{z}\mathsf{g}\boldsymbol{z}^\mathsf{T}\Big\} \in \mathbf{R}, \tag{1.47}$$

$$\langle\boldsymbol{z}_1|\boldsymbol{z}_2\rangle = \langle\boldsymbol{z}_2|\boldsymbol{z}_1\rangle^* = \exp\Big\{-\tfrac{1}{4}(\boldsymbol{z}_1-\boldsymbol{z}_2)\mathsf{g}(\boldsymbol{z}_1-\boldsymbol{z}_2)^\mathsf{T} + \tfrac{i}{2}\boldsymbol{z}_1\mathsf{J}\boldsymbol{z}_2^\mathsf{T}\Big\}. \tag{1.48}$$

1.3.2 The Parity Operator and the Wigner Operator

We define the parity operator $\hat{\Pi}$ as a unitary operator which generates the following transformation on $\hat{\boldsymbol{r}}$ [42]:

$$\hat{\Pi}\,\hat{\boldsymbol{r}}\,\hat{\Pi}^{\dagger} = -\hat{\boldsymbol{r}}. \tag{1.49}$$

By the uniqueness theorem of von Neumann, $\hat{\Pi}$ is determined up to a phase. If we also demand that

$$\hat{\Pi}^{-1} = \hat{\Pi}, \quad \text{and} \quad \hat{\Pi}|\mathbf{0}\rangle = |\mathbf{0}\rangle, \tag{1.50}$$

then the parity operator $\hat{\Pi}$ is uniquely determined as a special element of $\mathbf{WMp}(2N, \mathbf{R})$ [78]:

$$\hat{\Pi} = (4\pi)^{-N} \int_{-\infty}^{+\infty} d^{2N}z\,\hat{D}(\boldsymbol{z}) = \exp\left\{\tfrac{i}{2}\pi(\hat{\boldsymbol{r}}\mathbf{g}\hat{\boldsymbol{r}}^{\mathsf{T}} - N\hat{\mathbf{1}})\right\}, \tag{1.51}$$

where $\frac{1}{2}(\hat{\boldsymbol{r}}\mathbf{g}\hat{\boldsymbol{r}}^{\mathsf{T}} - N\hat{\mathbf{1}})$ is usually called the number operator for the total system.

The Wigner operator $\hat{\Delta}_W(\boldsymbol{z})$ is defined as the symplectic Fourier transform of the Weyl operator $\hat{D}(-\boldsymbol{z})$:

$$\hat{\Delta}_W(\boldsymbol{z}) = (2\pi)^{-2N} \int_{-\infty}^{+\infty} d^{2N}\zeta\, \exp\{-i\zeta\mathsf{J}\boldsymbol{z}^{\mathsf{T}}\}\,\hat{D}(-\zeta), \tag{1.52}$$

i.e., $\hat{\Delta}_W(\boldsymbol{z})$ and $\hat{D}(-\boldsymbol{z})$ form a symplectic Fourier transform pair. The inverse of the above relation is

$$\hat{D}(-\boldsymbol{z}) = \int_{-\infty}^{+\infty} d^{2N}\zeta\, \exp\{-i\zeta\mathsf{J}\boldsymbol{z}^{\mathsf{T}}\}\,\hat{\Delta}_W(\zeta). \tag{1.53}$$

Using (1.46) and (1.51), the explicit form of the Wigner operator can be obtained as [9, 68]

$$\hat{\Delta}_W(\boldsymbol{z}) = \pi^{-N}\hat{D}(2\boldsymbol{z})\hat{\Pi} = \pi^{-N}\hat{\Pi}\hat{D}(-2\boldsymbol{z}), \tag{1.54}$$

hence $\hat{\Delta}_W(\boldsymbol{z})$ is an element of $\mathbf{WMp}(2N, \mathbf{R})$. It is easy to prove that $\hat{\Delta}_W(\boldsymbol{z})$ is a Hermitian operator, and

$$\left[\pi^N\hat{\Delta}_W(\boldsymbol{z})\right]^2 = \int_{-\infty}^{+\infty} d^{2N}z\,\hat{\Delta}_W(\boldsymbol{z}) = \hat{\mathbf{1}}. \tag{1.55}$$

The transformation of the Wigner operator under $\mathbf{WMp}(2N, \mathbf{R})$ is defined as

$$\begin{aligned}
&\left[\hat{T}(\theta, z_c)\hat{S}(\mathsf{M})\right]^{\dagger}\hat{\Delta}_W(z)\left[\hat{T}(\theta, z_c)\,\hat{S}(\mathsf{M})\right] \\
&= \hat{S}^{\dagger}(\mathsf{M})\hat{D}^{\dagger}(z_c)\hat{\Delta}_W(z)\hat{D}(z_c)\,\hat{S}(\mathsf{M}) \\
&= \hat{\Delta}_W\Big((z - z_c)\mathsf{M}^{\mathsf{T}}\Big),
\end{aligned} \tag{1.56}$$

hence this transformation induces a linear canonical transformation on the argument of the Wigner operator, which is isomorphic to the linear canonical transformation (1.17).

1.3.3 Trace and Pseudo-trace of Operators

The pseudo-trace of an operator $\hat{f}(\hat{r})$ is defined in terms of the coherent state basis as follows:

$$tr\Big(\hat{f}(\hat{r})\Big) = (2\pi)^{-N}\int_{-\infty}^{+\infty} d^{2N}z\,\langle z|\hat{f}(\hat{r})|z\rangle. \tag{1.57}$$

Using (1.40), we can prove that if $\hat{f}(\hat{r})$ is in the trace class [75], i.e., the ordinary trace $Tr(\hat{f}(\hat{r}))$ is a finite complex number and is independent of the choice of the basis, then

$$Tr\Big(\hat{f}(\hat{r})\Big) = tr\Big(\hat{f}(\hat{r})\Big). \tag{1.58}$$

Therefore the pseudo-trace of a trace-class operator is identical to the ordinary trace of this operator.

Although the parity operator, Weyl operator, and Wigner operator are not in the trace class, we still have well-defined pseudo-traces of these operators. The following formulas will be useful in later discussion:

$$tr\Big(\hat{\Pi}\Big) = 2^{-N}, \tag{1.59}$$

$$tr\Big(\hat{D}(z)\Big) = (2\pi)^N\delta(z), \tag{1.60}$$

$$tr\Big(\hat{\Delta}_W(z)\Big) = (2\pi)^{-N}, \tag{1.61}$$

$$tr\Big(\hat{D}(z_1)\hat{D}(z_2)\Big) = (2\pi)^N\delta(z_1 + z_2), \tag{1.62}$$

$$tr\Big(\hat{\Delta}_W(z_1)\hat{\Delta}_W(z_2)\Big) = (2\pi)^{-N}\delta(z_1 - z_2). \tag{1.63}$$

In the following context, we will also need to use the general result that if $\hat{f}(\hat{r})\hat{g}(\hat{r})$ is in the trace class, then

$$Tr\Big(\hat{f}(\hat{r})\hat{g}(\hat{r})\Big) = Tr\Big(\hat{g}(\hat{r})\hat{f}(\hat{r})\Big). \tag{1.64}$$

1.4 Stochastic Processes

In this section we shall review the theory of stochastic processes with a continuous parameter and a continuous state space. The continuous parameter will be denoted by $t \geq 0$ and interpreted as time. For the stochastic process formulations, we shall always use $m, n \in \mathbf{N}$ for the subscripts, and $0 \leq t_1 \leq t_2 \leq t_3 \cdots\cdots$ for the time moments throughout this paper.

1.4.1 Definitions and Theorems

A (stochastic) process $\check{y}(t)$ can be naively defined as a time dependent random variable which is described by a set of probability densities $P_n(y_1; t_1, y_2; t_2, \cdots, y_n; t_n)$, among which $P_1(y_1; t_1) \equiv P(y_1; t_1)$ is the probability density that $\check{y}(t)$ has the value y_1 at time t_1 (which is usually called *the distribution function* by physicists), and in general $P_n(y_1; t_1, y_2; t_2, \cdots, y_n; t_n)$ is the joint probability density that $\check{y}(t)$ has the value y_1 at time t_1, y_2 at time t_2, $\cdots$, and y_n at time t_n. These (joint) probability densities satisfy the following consistency conditions [53]:

$$P_n(y_1; t_1, y_2; t_2, \cdots, y_n; t_n) \geq 0, \tag{1.65}$$

$$\begin{aligned} &\int_{-\infty}^{+\infty} dy_m P_n(y_1; t_1, y_2; t_2, \cdots, y_n; t_n) \\ &= P_{n-1}(y_1; t_1, \cdots y_{m-1}; t_{m-1}, y_{m+1}; t_{m+1}, \cdots, y_n; t_n), \quad 1 \leq m \leq n, \end{aligned} \tag{1.66}$$

$$\int_{-\infty}^{+\infty} dy_1 P(y_1; t_1) = 1, \tag{1.67}$$

and $P_n(y_1;t_1,y_2;t_2,\cdots,y_n;t_n)$ is symmetric with respect to the exchange of any two pairs $(y_a;t_a)$ and $(y_b;t_b)$, where $1\leq a,b\leq n$. A stochastic process $\breve{y}(t)$ is called a multivariate process if $\breve{y}(t)$ is a random-variable-valued vector with more than one component, otherwise it is called a one-variable (or one-dimensional) process. In the following, we shall deal with one-variable real-valued stochastic processes unless otherwise mentioned.

The mean of a process $\breve{y}(t)$ is defined as

$$\left\langle \breve{y}(t)\right\rangle = \int_{-\infty}^{+\infty} dy P(y;t)\, y. \tag{1.68}$$

The m-th moment of $\breve{y}(t)$ is defined as

$$\begin{aligned}&\left\langle \breve{y}(t_1)\breve{y}(t_2)\cdots\breve{y}(t_m)\right\rangle\\ &= \int_{-\infty}^{+\infty} dy_1 dy_2\cdots dy_m P_m(y_1;t_1,y_2;t_2,\cdots,y_m;t_m)\, y_1 y_2\cdots y_m\end{aligned} \tag{1.69}$$

if the integral converges, otherwise we say that there is no m-th moment for this process. A process with an m-th moment is called an m-th order process. The (auto)-correlation function of a second-order process $\breve{y}(t)$ is defined as

$$\begin{aligned}\left\langle\!\!\left\langle \breve{y}(t_1)\breve{y}(t_2)\right\rangle\!\!\right\rangle &= \left\langle\!\!\left\langle \breve{y}(t_2)\breve{y}(t_1)\right\rangle\!\!\right\rangle\\ &= \left\langle \left[\breve{y}(t_1)-\langle\breve{y}(t_1)\rangle\right]\left[\breve{y}(t_2)-\langle\breve{y}(t_2)\rangle\right]\right\rangle\\ &= \left\langle \breve{y}(t_1)\breve{y}(t_2)\right\rangle - \left\langle \breve{y}(t_1)\right\rangle\left\langle \breve{y}(t_2)\right\rangle.\end{aligned} \tag{1.70}$$

The conditional probability densities of a process are defined as

$$\begin{aligned}&P_{m|n}(y_1;t_1,y_2;t_2\cdots y_m;t_m|y_{m+1};t_{m+1},\cdots,y_{m+n};t_{m+n})\\ &= \frac{P_{m+n}(y_1;t_1,y_2;t_2\cdots,y_{m+n};t_{m+n})}{P_m(y_1;t_1,\cdots,y_m;t_m)},\end{aligned} \tag{1.71}$$

among which

$$P_{1|1}(y_1;t_1|y_2;t_2) \equiv P(y_1;t_1|y_2;t_2) = \frac{P_2(y_1;t_1,y_2;t_2)}{P(y_1;t_1)} \tag{1.72}$$

is usually called the transition probability density because of the following identity:

$$P(y_2;t_2) = \int_{-\infty}^{+\infty} dy_1 P(y_1;t_1|y_2;t_2)P(y_1;t_1). \tag{1.73}$$

It then follows that $P(y_1;t|y_2;t)=\delta(y_1-y_2)$, which is independent of t.

A stochastic process $\breve{y}(t)$ is called stationary if for all n:

$$\left\langle \breve{y}(t_1+\Delta t)\breve{y}(t_2+\Delta t)\cdots\breve{y}(t_n+\Delta t)\right\rangle = \left\langle \breve{y}(t_1)\breve{y}(t_2)\cdots\breve{y}(t_n)\right\rangle, \tag{1.74}$$

or equivalently,

$$P_n(y_1;t_1+\Delta t, y_2;t_2+\Delta t,\cdots,y_n;t_n+\Delta t) = P_n(y_1;t_1,y_2;t_2,\cdots,y_n;t_n). \tag{1.75}$$

For a stationary process, $P(y_1;t_1)=P(y_1)$ is time-independent, and $P_2(y_1;t_1,y_2;t_2)=P_2(y_1;0,y_2;t_2-t_1)$. In other words, the mean of a stationary process is time-independent, and the correlation function

$$\left\langle\!\!\left\langle \breve{y}(t_1)\breve{y}(t_2)\right\rangle\!\!\right\rangle = \left\langle\!\!\left\langle \breve{y}(0)\breve{y}(t_2-t_1)\right\rangle\!\!\right\rangle = \left\langle\!\!\left\langle \breve{y}(t_1-t_2)\breve{y}(0)\right\rangle\!\!\right\rangle \tag{1.76}$$

is an even function of (t_1-t_2).

A stochastic process $\breve{y}(t)$ is called Gaussian if the (joint) probability density $P_n(y_1;t_1, y_2;t_2,\cdots,y_n;t_n)$ of this process is an n-dimensional Gaussian distribution in $(y_1,\cdots,y_n)$ for every n. A Gaussian process is completely determined by its mean and correlation function.

A stochastic process $\breve{y}(t)$ is called Markovian if

$$P_{m|1}(y_1;t_1,y_2;t_2,\cdots,y_m;t_m|y_{m+1};t_{m+1}) = P(y_m;t_m|y_{m+1};t_{m+1}) \tag{1.77}$$

for every m, hence it is fully determined by $P(y_1;t_1)$ and $P(y_1;t_1|y_2;t_2)$. For a Markovian process, the transition probability density $P(y_1;t_1|y_2;t_2)$ must satisfy the (Bachelier–Smoluchowski–) Chapman–Kolmogorov equation,

$$P(y_1;t_1|y_2;t_2) = \int_{-\infty}^{+\infty} dy P(y_1;t_1|y;t)P(y;t|y_2;t_2), \tag{1.78}$$

where $t_1 \le t \le t_2$.

A stationary Gaussian process $\breve{y}(t)$ is Markovian if and only if

$$\left\langle\!\!\left\langle \breve{y}(t)\breve{y}(0)\right\rangle\!\!\right\rangle = \left\langle\!\!\left\langle \breve{y}(0)\breve{y}(0)\right\rangle\!\!\right\rangle \exp\left(-\gamma|t|\right), \quad \gamma>0. \tag{1.79}$$

This is usually called Doob's theorem [97].

The power spectrum (or the spectral density) of a stationary process $\breve{y}(t)$ is defined as the Fourier transform of its correlation function $\langle\langle\breve{y}(t)\breve{y}(0)\rangle\rangle$:

$$I_y(\omega) = \int_{-\infty}^{+\infty} dt \exp(i\omega t)\Big\langle\!\Big\langle \breve{y}(t)\breve{y}(0)\Big\rangle\!\Big\rangle$$

$$= \int_{-\infty}^{+\infty} dt \cos(\omega t)\Big\langle\!\Big\langle \breve{y}(t)\breve{y}(0)\Big\rangle\!\Big\rangle. \tag{1.80}$$

The power spectrum $I_y(\omega)$ is an even function of ω because the correlation function is an even function of t. Note that there is an equivalent definition for the power spectrum in terms of the Fourier transform or Fourier series of $\breve{y}(t)$. If we use this alternative definition, then (1.80) follows as the famous Wiener–Khinchin theorem.

For a given stochastic process $\breve{y}(t)$, if we have an explicit expression $\breve{y}(t) = Y(\breve{\boldsymbol{\alpha}}; t)$, where $\breve{\boldsymbol{\alpha}}$ is a λ-dimensional multivariate random variable ($\lambda \in \mathbf{N}$), and the probability density $\mathcal{P}(\boldsymbol{\alpha})$ for $\breve{\boldsymbol{\alpha}}$ is given. Then the probability density for the process $\breve{y}(t)$ can be obtained as

$$P(y;t) = \int_{-\infty}^{+\infty} d^\lambda\alpha\mathcal{P}(\boldsymbol{\alpha})\delta\Big(y - Y(\boldsymbol{\alpha};t)\Big) = \Big\langle\delta\Big(y - Y(\breve{\boldsymbol{\alpha}};t)\Big)\Big\rangle, \tag{1.81}$$

and in general, for those joint probability densities:

$$\begin{aligned} &P_n(y_1;t_1,y_2;t_2,\cdots,y_n;t_n) \\ &= \int_{-\infty}^{+\infty} d^\lambda\alpha\mathcal{P}(\boldsymbol{\alpha})\delta\Big(y_1 - Y(\boldsymbol{\alpha};t_1)\Big)\delta\Big(y_2 - Y(\boldsymbol{\alpha};t_2)\Big)\cdots\delta\Big(y_n - Y(\boldsymbol{\alpha};t_n)\Big) \\ &= \Big\langle\delta\Big(y_1 - Y(\breve{\boldsymbol{\alpha}};t_1)\Big)\delta\Big(y_2 - Y(\breve{\boldsymbol{\alpha}};t_2)\Big)\cdots\delta\Big(y_n - Y(\breve{\boldsymbol{\alpha}};t_n)\Big)\Big\rangle. \end{aligned} \tag{1.82}$$

Hence we have

$$\Big\langle\breve{y}(t)\Big\rangle = \int_{-\infty}^{+\infty} d^\lambda\alpha\mathcal{P}(\boldsymbol{\alpha})Y(\boldsymbol{\alpha};t) = Y\Big(\langle\breve{\boldsymbol{\alpha}}\rangle;t\Big), \tag{1.83}$$

and

$$\Big\langle\breve{y}(t_1)\breve{y}(t_2)\cdots\breve{y}(t_n)\Big\rangle = \int_{-\infty}^{+\infty} d^\lambda\alpha\mathcal{P}(\boldsymbol{\alpha})Y(\boldsymbol{\alpha};t_1)Y(\boldsymbol{\alpha};t_2)\cdots Y(\boldsymbol{\alpha};t_n), \tag{1.84}$$

which are analogous to the quantum-mechanical formulations in the Heisenberg picture.

1.4.2 Stochastic Differential Equations

Roughly speaking, a stochastic differential equation is a differential equation which connects two or more stochastic processes. For example, the following is a second-order stochastic differential equation:

$$\ddot{\breve{y}}(t) + c_1\dot{\breve{y}}(t) + c_0\breve{y}(t) = \breve{W}(t), \tag{1.85}$$

where $\breve{W}(t)$ is a given process and $\breve{y}(t)$ is the unknown one, and c_0 and $c_1 \in \mathbf{R}$. If the given $\breve{W}(t)$ is stationary, although the stationary solution always exists, in general there are many other non-stationary solutions for (1.85). For the stationary solution of (1.85), its power spectrum can be determined by Fourier analysis as follows [103]:

$$I_y(\omega) = \frac{I_W(\omega)}{|-\omega^2 - ic_1\omega + c_0|^2}. \tag{1.86}$$

Hence the correlation function of the stationary solution is determined according to the above algebraic relation.

As a generalization of the stochastic differential equation (1.85), let us consider the following stochastic integro-differential equation for $\breve{y}(t)$:

$$\ddot{\breve{y}}(t) + \int_{-\infty}^{t} d\tau\, b(t-\tau)\dot{\breve{y}}(\tau) + c_0\breve{y}(t) = \breve{W}(t), \tag{1.87}$$

where $\breve{W}(t)$ is a given process and $b(t)$ is the memory kernel. It is obvious that (1.87) contains (1.85) as a special case. We can also Fourier analyze (1.87) and get the power spectrum for the stationary solution as

$$I_y(\omega) = \frac{I_W(\omega)}{\left|-\omega^2 - i\omega\bar{b}[-i\omega] + c_0\right|^2}, \tag{1.88}$$

where $\bar{b}[-i\omega]$ is the Fourier–Laplace transform of $b(t)$. Hence the correlation function of the stationary solution for (1.87) is determined by the above relation.

Chapter 2

Classical Theories of Brownian Motion

2.1 Historical Remarks

Brownian motion [71] was first discovered by the English botanist R. Brown in 1827 from the observations of tiny pollen grains immersed in a liquid. The cause of this kind of motion was in debate for decades until A. Einstein proposed a sound kinetic theory in 1905 [24]. Einstein considered Brownian motion of many identical free particles as a diffusion process, and derived the diffusion equation as the equation of motion for the number density of the Brownian particles under certain approximations. At the same time, and at first independently, the Polish physicist M. Smoluchowski used the same approach but a different mathematical formulation to study this problem. In a paper published in 1906, Smoluchowski generalized Einstein's theory of Brownian motion to a particle in an external force field.

In 1908, P. Langevin derived the first phenomenological dynamical equation for Brownian motion, in which the force from the environment acting upon a Brownian particle is separated into two terms—the friction and the random force [60]. On the other hand, in the 1910's A. Fokker, and later M. Planck, derived the equation of motion for the distribution function of the Brownian particle, which is now called the Fokker–Planck equation and is mathematically equivalent to the Langevin equation. The generalization of the Fokker–Planck equation was made by H. Kramers, and later by J. Moyal, in the

1940's [53, 77].

In 1923, N. Wiener studied the mathematical model for Brownian motion and gave a concise and rigorous definition of the stochastic process corresponding to the displacement of a Brownian particle, known as the Wiener process [100]. Later, other mathematicians including A. Kolmogorov, W. Feller, P. Lévy, and J. Doob also made important contributions to the mathematical theory of Brownian motion.

In 1930, L. Ornstein and G. Uhlenbeck modified the Langevin equation by giving an explicit definition of the random force [94]. Their theory then became the most well-known classical theory of Brownian motion. In the 1960's, H. Mori, and later R. Kubo, made a further modification to the Langevin–Ornstein–Uhlenbeck theory by generalizing the Langevin equation to an integro-differential equation, which is now called the generalized Langevin equation [56, 69].

In the following we shall give a short review of these classical theories. This review does not exactly follow the historical development, and the discussions will be restricted to one-dimensional Brownian motion.

2.2 Einstein–Smoluchowski Theory

In the Einstein–Smoluchowski theory, Brownian motion is treated as a diffusion process of many identical Brownian particles, with the assumption that the cause of this diffusion is the random bombardment from the environmental molecules due to thermal motion. The mathematical model they considered is essentially the one-dimensional continuous-time random walk.

In Einstein's original theory [24], he considered the Brownian particles as an ensemble of many initially identical free particles in thermal equilibrium with the environment. The distribution of these Brownian particles is described by the number density $n(x;t)$, where x is the coordinate in configuration space and t is the time elapsed. Einstein then showed that the equation of motion for the number density $n(x;t)$ is the diffusion equation

$$\left[\frac{\partial}{\partial t} - D_x \frac{\partial^2}{\partial x^2}\right] n(x;t) = 0. \tag{2.1}$$

Using theories in thermodynamics and hydrodynamics, Einstein was able to give an

explicit expression for D_x, the configuration-space diffusion coefficient, as

$$D_x = \frac{\mu}{\beta}, \tag{2.2}$$

where μ is the mobility of a Brownian particle and β^{-1} is the temperature of the environment. Eq. (2.2) is known as the Einstein relation.

For the initial condition that all Brownian particles are at the origin when $t=0$, i.e., $n(x,0)=\mathcal{N}\delta(x)$ with $\mathcal{N}$ being the total number of the Brownian particles, the solution of the diffusion equation (2.1) is

$$n(x;t) = \frac{\mathcal{N}}{\sqrt{4\pi D_x t}} \exp\left\{-\frac{x^2}{4D_x t}\right\}. \tag{2.3}$$

It then follows that the mean displacement of a Brownian particle is zero, while the root-mean-square displacement is

$$\sqrt{\langle x(t)^2\rangle} = \sqrt{2D_x t}, \tag{2.4}$$

which is the main result in Einstein's theory.

In Smoluchowski's paper, instead of using the number density, he discussed the transition probability density $P(x_0;0|x;t)$ for the probability density that a Brownian particle makes a transition from x_0 at $t=0$ to x at t. The Smoluchowski equation for $P(x_0;0|x;t)$ takes the form [52]

$$\left[\frac{\partial}{\partial t} - \mu\frac{\partial}{\partial x}V'(x) - D_x\frac{\partial^2}{\partial x^2}\right]P(x_0;0|x;t) = 0, \tag{2.5}$$

where

$$-V'(x) \equiv -\frac{\partial V(x)}{\partial x} \tag{2.6}$$

is the external force acting upon the Brownian particle, and μ and D_x are the same as those in Einstein's theory. The initial condition of the Smoluchowski equation is obviously $P(x_0;0|x;0)=\delta(x-x_0)$. If the external force is set equal to zero, then (2.5) reduces to

$$\left[\frac{\partial}{\partial t} - D_x\frac{\partial^2}{\partial x^2}\right]P(x_0;0|x;t) = 0, \tag{2.7}$$

which can be interpreted as the equation for the Green's function of the diffusion equation (2.1) in Einstein's theory since

$$n(x;t) = \int_{-\infty}^{+\infty} dx_0 P(x_0;0|x;t)n(x_0;0) \tag{2.8}$$

for an arbitrary initial number density $n(x_0;0)$.

From the general theory of random walks, we know that the displacement of a Brownian particle in the Einstein–Smoluchowski theory is a Markovian process. However, the momentum of a Brownian particle is not well-defined in this theory.

2.3 Wiener Process and White Noise

The Wiener (or Wiener–Lévy) process $\check{W}(t)$ [53, 100, 103] is a stochastic process which models the displacement of a free Brownian particle in the Einstein–Smoluchowski theory. It is defined by the following conditions:

(i) $\check{W}(t)$ is almost everywhere continuous;

(ii) $\check{W}(0)=0$;

(iii) $[\check{W}(t_2)-\check{W}(t_1)]$ has a Gaussian distribution with mean 0 and variance $2D_W(t_2-t_1)$;

(iv) $\check{W}(t)$ has independent increments, i.e., $[\check{W}(t_2)-\check{W}(t_1)]$, $[\check{W}(t_3)-\check{W}(t_2)]$, $\cdots\cdots$, $[\check{W}(t_n)-\check{W}(t_{n-1})]$ are mutually independent.

It can be proved that the probability density for the Wiener process defined above takes the form

$$P(W;t)=\frac{1}{\sqrt{4\pi D_W t}}\exp\left\{-\frac{W^2}{4D_W t}\right\}. \tag{2.9}$$

The Wiener process $\check{W}(t)$ is both Gaussian and Markovian, but it is not a stationary process. Although the original Wiener process is designed for describing the displacement of a free Brownian particle, wherein $D_W=D_x$ for this interpretation, the time derivative of the Wiener process serves as the mathematical model of the idealized random force, the so-called white noise. Rigorously speaking, white noise thus defined is not an ordinary stochastic process, but it can be understood as a generalized stochastic process just as the delta function may be regarded as a generalized function.

2.4 Langevin–Ornstein–Uhlenbeck Theory

Langevin's approach to Brownian motion is a phenomenological dynamical theory [60]. For a single Brownian particle in thermal equilibrium with the environment, the time-dependent force that the environment acts upon the Brownian particle is due to the

incessant impacts from the environmental molecules. Langevin's idea was to separate this time-dependent force into two parts: (i) a time-average-out part, which represents the time-independent friction experienced by the Brownian particle, and (ii) a rapidly fluctuating part, usually called the random force, which is time-dependent with zero time average. The most general Langevin equation for one-dimensional Brownian motion takes the form

$$m\ddot{x}(t) + m\gamma\dot{x}(t) + V'(x(t)) = f(t), \tag{2.10}$$

where m and x are the mass and position of the Brownian particle, respectively, $f(t)$ is the random force, $-V'(x)$ represents the external force due to a given potential as defined in (2.6), and $-m\gamma\dot{x}$ corresponds to the friction which is proportional to the velocity $\dot{x}$ according to Stoke's law in hydrodynamics ($m\gamma > 0$ is usually called the friction constant). If the external force is zero, then (2.10) can be simplified into

$$\dot{k}(t) + \gamma k(t) = f(t), \tag{2.11}$$

where $k = m\dot{x}$ is the momentum of the Brownian particle.

Using (2.11), with the assumption that the Brownian particle is in thermal equilibrium with the environment, Langevin was able to rederive the Einstein relation with $D_x = (m\gamma\beta)^{-1}$.

In the Ornstein–Uhlenbeck theory [94, 97], the Langevin equation is implicitly reinterpreted as a stochastic differential equation with a well-defined random force. In our notation, the Langevin equation (2.10) in the Ornstein–Uhlenbeck theory becomes

$$m\ddot{\breve{x}}(t) + m\gamma\dot{\breve{x}}(t) + V'(\breve{x}(t)) = \breve{f}(t), \tag{2.12}$$

with the random force $\breve{f}(t)$ defined explicitly as a generalized stochastic process which is characterized by [53, 56, 57, 77]:

(I) $\langle\breve{f}(t)\rangle = 0$ from Langevin's original assumption.

(II) $\langle\langle\breve{f}(t_1)\breve{f}(t_2)\rangle\rangle = \langle\breve{f}(t_1)\breve{f}(t_2)\rangle = 2D_k\,\delta(t_1 - t_2)$ with $D_k > 0$, which means that there is no correlation between the random forces at different times, i.e., the random force is purely random hence stationary. The power spectrum of this random force is $2D_k$, which is frequency-independent. Therefore this random force acquired the name white noise.

(III) $\breve{f}(t)$ is a Gaussian process according to the central limit theorem. Since it is assumed that Brownian motion is the result of a great number of successive impacts due to thermal motion of the environmental molecules.

The white noise defined above is exactly the time derivative of the Wiener process discussed in Sec. 2.3 with $D_W = D_k$. It will be shown later that D_k is the momentum-space diffusion coefficient. In the following, we shall discuss two examples of the Langevin–Ornstein–Uhlenbeck equation [97]:

(I) Brownian motion of a free particle:

$$\dot{\breve{k}}(t) + \gamma \breve{k}(t) = \breve{f}(t), \tag{2.13}$$

which is an analogue of (2.11). According to the discussion in Sec. 1.4.2, we have for the stationary solution:

$$I_k(\omega) = \frac{2D_k}{\omega^2 + \gamma^2}, \tag{2.14}$$

and the correlation function follows as

$$\left\langle\!\!\left\langle \breve{k}(t)\breve{k}(0) \right\rangle\!\!\right\rangle = \frac{D_k}{\gamma} \exp\left(-\gamma\,|t|\right). \tag{2.15}$$

Because the white noise $\breve{f}(t)$ is a Gaussian process, so is this stationary momentum process $\breve{k}(t)$. Hence we see that this $\breve{k}(t)$ is a Markovian process according to Doob's theorem. On the other hand, it follows that the corresponding position $\breve{x}(t)$ of the Brownian particle is non-Markovian. This stationary momentum process $\breve{k}(t)$, or the corresponding velocity process, is usually called the Ornstein–Uhlenbeck process.

Taking the mean of (2.13), we get the differential equation for $\langle \breve{k}(t) \rangle$ as

$$\frac{d}{dt}\langle \breve{k}(t) \rangle + \gamma \langle \breve{k}(t) \rangle = 0. \tag{2.16}$$

From the solution to the above equation,

$$\langle \breve{k}(t) \rangle = \langle \breve{k}(0) \rangle \exp(-\gamma t), \tag{2.17}$$

it is obvious that $\langle \breve{k}(t) \rangle \equiv 0$ for the stationary solution of (2.13), which corresponds to (i) $\langle \breve{k}(0) \rangle = 0$, or (ii) $t \to \infty$. Hence we find that for the stationary solution:

$$\left\langle \breve{k}(t)\breve{k}(0) \right\rangle = \left\langle\!\!\left\langle \breve{k}(t)\breve{k}(0) \right\rangle\!\!\right\rangle = \frac{D_k}{\gamma} \exp\left(-\gamma\,|t|\right). \tag{2.18}$$

Setting $t=0$ in (2.18), we get the momentum variance of the Brownian particle:

$$\left\langle \check{k}(0)^2 \right\rangle = \left\langle \check{k}(\tau)^2 \right\rangle = \frac{D_k}{\gamma}. \tag{2.19}$$

Comparing with the equipartition law in classical statistical mechanics, we can determine the explicit form of D_k as

$$D_k = \frac{m\gamma}{\beta}. \tag{2.20}$$

(II) Brownian motion of a harmonic oscillator:

$$\ddot{\check{x}}(t) + \gamma\dot{\check{x}}(t) + \omega_0^2\check{x}(t) = \frac{\check{f}(t)}{m}, \tag{2.21}$$

where $\check{x}$ is measured from its balanced position with respect to the Hooke force, and ω_0 is the characteristic frequency of the Brownian particle as a harmonic oscillator. For the stationary solution:

$$I_x(\omega) = \frac{2D_k/m^2}{(\omega^2-\omega_0^2)^2+(\gamma\omega)^2}, \tag{2.22}$$

hence

$$I_k(\omega) = \frac{2D_k\omega^2}{(\omega^2-\omega_0^2)^2+(\gamma\omega)^2}. \tag{2.23}$$

From the above two power spectra for $\check{x}(t)$ and $\check{k}(t)$, we find that neither $\check{x}(t)$ nor $\check{k}(t)$ is Markovian. However, it will be shown in Sec. 2.6 that $(\check{x}(t), \check{k}(t))$ is a multivariate Markovian process with respect to this harmonic Brownian motion.

2.5 Generalized Langevin Equation

The limitation of the Langevin–Ornstein–Uhlenbeck equation can be easily seen from the correlation function (2.15). As an even function of t, it is not differentiable at $t=0$ since there is a cap at that point. It then follows that the correlation function

$$\left\langle\!\left\langle \check{k}(0)\dot{\check{k}}(0) \right\rangle\!\right\rangle = \left\langle\!\left\langle \check{k}(\tau)\dot{\check{k}}(\tau) \right\rangle\!\right\rangle \tag{2.24}$$

is not well-defined. This defect is due to the idealized assumption that the random force is a white noise. For small t, Eq. (2.15) represents the correlation between two momenta separated by a very short time interval. But from physical considerations, the Brownian

particle suffers only a few or even no impacts during a very short time, and the white noise assumption is obvious invalid for this situation [56, 59].

In order to take into account the phenomena involving small time intervals, wherein the time scale of thermal motion of the environmental molecules is not very much shorter than that of the Brownian particle, the assumption that the random force is purely random, i.e., delta-correlated, has to be abandoned. Accordingly, we also have to abandon the assumption that the friction is determined by the instantaneous velocity of the Brownian particle, the so-called ohmic dissipation, and replace it by a retarded friction which corresponds to non-ohmic dissipation [57].

The generalized Langevin equation, proposed by Mori and Kubo [56, 57, 69], is a natural generalization of the Langevin equation which comprises the above more delicate considerations. The generalized Langevin equation corresponding to (2.13) takes the form

$$\dot{\breve{k}}(t) + \int_{-\infty}^{t} d\tau \Gamma(t-\tau)\breve{k}(\tau) = \breve{F}(t), \tag{2.25}$$

and that corresponding to (2.21) is

$$\ddot{\breve{x}}(t) + \int_{-\infty}^{t} d\tau \Gamma(t-\tau)\dot{\breve{x}}(\tau) + \omega_0^2 \breve{x}(t) = \frac{\breve{F}(t)}{m}, \tag{2.26}$$

where $\breve{F}(t)$ is the counterpart of the white noise $\breve{f}(t)$, and $\Gamma(t)$ is the memory kernel which satisfies [30]

$$\lim_{t\to\infty} \Gamma(t) = 0. \tag{2.27}$$

Conventionally, $\Gamma(t)$ is defined as an even function of t. This does not violate the causality principle since the upper limits of the integral terms in these two generalized Langevin equations are t instead of $+\infty$.

Eqs. (2.25) and (2.26) reduce to (2.13) and (2.21), respectively, when $\breve{F}(t) = \breve{f}(t)$ and $\Gamma(t) = 2\gamma\delta(t)$ according to (1.11).

For the random force $\breve{F}(t)$ in the generalized Langevin equation (2.25) and (2.26), it is still reasonable to assume that $\breve{F}(t)$ is Gaussian, stationary, and zero centered, hence it can also be characterized by its correlation function. In order to ensure that the system achieves an equilibrium state, whose characterization is independent of $\breve{F}(t)$, it

is necessary to assume that the memory kernel $\Gamma(t)$ and the correlation function of $\breve{F}(t)$ are related by the following relation [18, 57]:

$$\left\langle\!\left\langle \breve{F}(t)\breve{F}(0) \right\rangle\!\right\rangle = \frac{m\Gamma(t)}{\beta}. \tag{2.28}$$

The Fourier transform of the above relation gives the power spectrum of $\breve{F}(t)$:

$$I_F(\omega) = \frac{m}{\beta}\int_{-\infty}^{+\infty} dt\, \exp(i\omega t)\Gamma(t) = \frac{2m}{\beta}\mathrm{Re}\bar{\Gamma}[-i\omega], \tag{2.29}$$

where $\bar{\Gamma}[-i\omega]$ is the Fourier–Laplace transform of $\Gamma(t)$. Since $I_F(\omega)$ is frequency-dependent, the random force $\breve{F}(t)$ is usually called colored noise in contrast to the white noise defined in Sec. 2.4. Therefore we conclude that in general the white noise is associated with ohmic dissipation, while the colored noise is associated with non-ohmic dissipation.

From the results in Sec. 1.4.2, we have for the stationary solution of (2.25):

$$I_k(\omega) = \frac{I_F(\omega)}{\left|-i\omega + \bar{\Gamma}[-i\omega]\right|^2}, \tag{2.30}$$

which corresponds to a correlation function which is smooth at $t = 0$ in general [103]. Similarly, for the stationary solution of (2.26), we have

$$I_x(\omega) = \frac{I_F(\omega)/m^2}{\left|-\omega^2 - i\omega\bar{\Gamma}[-i\omega] + \omega_0^2\right|^2}. \tag{2.31}$$

2.6 Fokker–Planck Equation

Conventionally, the terms Fokker–Planck equation, Kramers–Moyal expansion, and master equation are usually defined only for Markovian processes, but the non-Markovian generalizations of these equations have also been discussed in the literature, e.g., the non-Markovian Fokker–Planck equation [2] corresponding to the generalized Langevin equation (2.26). In this paper, we shall use these terms in the general sense, and take the Markovian versions of these equations as special cases.

For a stochastic process $\breve{y}(t)$, the Fokker–Planck equation and its generalization the Kramers–Moyal expansion of this process are partial differential equations for the probability density $P(y;t)$ or the transition probability density $P(y_0;0|y;t)$. In the

following, we shall first derive the Kramers–Moyal expansion from (1.73), and then take the Fokker–Planck equation as its approximation. *From now on we shall always use the term distribution function instead of probability density for $P(y;t)$.*

Rewriting (1.73) as

$$P(y;t+\Delta t) = \int_{-\infty}^{+\infty} dz' P(z';t|y;t+\Delta t) P(z';t), \tag{2.32}$$

it is then easy to obtain the time derivative of $P(y;t)$ as [77]

$$\left[\frac{\partial}{\partial t} - \sum_{\mu=1}^{\infty} \frac{(-1)^\mu}{\mu!} \frac{\partial^\mu}{\partial y^\mu} a_\mu(y;t)\right] P(y;t) = 0, \tag{2.33}$$

where

$$\begin{aligned} a_\mu(y;t) &\equiv \lim_{\Delta t \to 0} \frac{1}{\Delta t} \int_{-\infty}^{+\infty} dz P(y;t|z;t+\Delta t)(z-y)^\mu \\ &= \lim_{\Delta t \to 0} \left[\frac{1}{\Delta t} \left\langle \left(\breve{y}(t+\Delta t) - \breve{y}(t)\right)^\mu \right\rangle\right]_{\langle \breve{y}(t)\rangle = y} \end{aligned} \tag{2.34}$$

is called the μ-th order jump moment of the process $\breve{y}(t)$. Eq. (2.33) is the so-called (forward) Kramers–Moyal expansion.

If we assume that among all the jump moments only $a_1(y;t)$ and $a_2(y;t)$ are finite, which corresponds to $\breve{y}(t)$ always changing by small amounts in a short time interval, then the Kramers–Moyal expansion (2.33) reduces to the Fokker–Planck equation for the distribution function $P(y;t)$ over y-space:

$$\left[\frac{\partial}{\partial t} + \frac{\partial}{\partial y} a_1(y;t) - \frac{1}{2} \frac{\partial^2}{\partial y^2} a_2(y;t)\right] P(y;t) = 0. \tag{2.35}$$

In stochastic process theory, Eq. (2.35) is called the forward Kolmogorov equation.

In general, if the process $\breve{y}(t)$ is non-Markovian, then $a_\mu(y;t)$ depends on $\langle \breve{y}(\tau)\rangle$ for $\tau < t$. On the contrary, for a Markovian process $a_\mu(y;t)$ only depends on the instantaneous expectation value $\langle \breve{y}(t)\rangle$. This difference serves as a criterion for determining the Markovianness of a process defined by a given Fokker–Planck equation.

The Kramers–Moyal expansion, hence the Fokker–Planck equation, can also be derived through the master equation,

$$\frac{\partial P(y;t)}{\partial t} = \int_{-\infty}^{+\infty} dz \Big[\mathcal{W}(z,y;t) P(z;t) - \mathcal{W}(y,z;t) P(y;t)\Big], \tag{2.36}$$

which is essentially the differential version of (1.73). $\mathcal{W}(z, y; t)$ and $\mathcal{W}(y, z; t)$ in (2.36) are defined according to the expansion of the transition probability density $P(y; t|z; t + \Delta t)$:

$$P(y; t|z; t + \Delta t) \equiv \delta(z - y) + \Big[\mathcal{W}(y, z; t) - \delta(z - y) \int_{-\infty}^{+\infty} dz' \mathcal{W}(y, z'; t)\Big]\Delta t + O\Big((\Delta t)^2\Big). \tag{2.37}$$

$\mathcal{W}(y, z; t)$ is called the transition rate for the state jumping from y to z during the time interval $(t, \Delta t + t)$, it is independent of the previous history of the process if and only if the process is Markovian. Using the transition rate, the jump moment $a_\mu(y; t)$ in (2.34) can be expressed as

$$a_\mu(y; t) = \int_{-\infty}^{+\infty} dz \mathcal{W}(y, z; t)(z - y)^\mu. \tag{2.38}$$

Since the transition probability density $P(y_0; 0|y; t)$ can be interpreted as the Green's function for $P(y; t)$ according to (1.73), the Fokker–Planck equation for $P(y_0; 0|y; t)$ is of the same form as that for $P(y; t)$:

$$\left[\frac{\partial}{\partial t} + \frac{\partial}{\partial y} a_1(y; t) - \frac{1}{2}\frac{\partial^2}{\partial y^2} a_2(y; t)\right] P(y_0; 0|y; t) = 0. \tag{2.39}$$

In the Einstein–Smoluchowski theory of Brownian motion, the diffusion equation (2.1) and the Smoluchowski equation (2.5) are both special cases of the Fokker–Planck equation, where the distribution functions are over the configuration space.

In the Langevin–Ornstein–Uhlenbeck theory, it can be proved that the Fokker–Planck equation is exact instead of an approximation to the Kramers–Moyal expansion [57, 77, 97]. The Fokker–Planck equation for free Brownian motion corresponding to (2.13) takes the form

$$\left[\frac{\partial}{\partial t} - \gamma \frac{\partial}{\partial k} k - D_k \frac{\partial^2}{\partial k^2}\right] P(k; t) = 0, \tag{2.40}$$

where $P(k; t)$ is the distribution function over momentum space. Hence we see that D_k is the momentum-space diffusion coefficient.

As for the harmonic Brownian motion described by (2.21) in the Langevin–Ornstein–Uhlenbeck theory, the corresponding Fokker–Planck equation is

$$\left[\frac{\partial}{\partial t} + \frac{k}{m}\frac{\partial}{\partial x} - \frac{\partial}{\partial k}\Big(m\omega_0^2 x + \gamma k\Big) - D_k \frac{\partial^2}{\partial k^2}\right] P(x; k; t) = 0, \tag{2.41}$$

where $P(x;k;t)$ is the distribution function over phase space. From (2.41), it is obvious that $(\breve{x}(t), \breve{k}(t))$ is a multivariate Markovian process.

To solve the Fokker–Planck equation (2.41), it is easier to employ the symplectic Fourier transform of the distribution function $P(x,k;t)$ [97]:

$$\mathcal{C}(x,k;t) \equiv \int_{-\infty}^{+\infty} dx'dk' \exp[-i(x'k - k'x)]P(x',k';t), \tag{2.42}$$

which is the (classical) characteristic function corresponding to $P(x,k;t)$. The corresponding equation for $\mathcal{C}(x,k;t)$ takes the form

$$\left[\frac{\partial}{\partial t} + \left(\frac{k}{m} + \gamma x\right)\frac{\partial}{\partial x} - m\omega_0^2 x\frac{\partial}{\partial k} + D_k x^2\right]\mathcal{C}(x;k;t) = 0. \tag{2.43}$$

In contrast to (2.41), which is a second-order partial differential equation, Eq. (2.43) is of first order. Thus it can be solved exactly by using the method of characteristics.

Chapter 3

Representatives of Density Operators

In quantum mechanics the states of a system, either pure or mixed, can always be described by the Hermitian non-negative density operator (or density matrix) $\hat{\varrho}$. The density operator $\hat{\varrho}$ is in the trace class and is always normalized, i.e.,

$$Tr(\hat{\varrho}) = 1. \tag{3.1}$$

From this normalization condition, it follows that

$$0 < Tr\left(\hat{\varrho}^2\right) \leq 1, \tag{3.2}$$

where the equal sign holds if and only if $\hat{\varrho}$ corresponds to a pure state.

Once the density operator of a quantum system is determined, all physical observables of the system can be obtained via this density operator. For example, with respect to the state represented by $\hat{\varrho}$, the expectation value of a physical observable $\hat{O}$ is

$$\langle \hat{O} \rangle = Tr\left(\hat{\varrho}\hat{O}\right). \tag{3.3}$$

Since $\hat{\varrho}$ is an abstract operator, most of the time we need to use a representative (or representation) to perform practical calculations. In the literature there are many equivalent representatives [31], e.g., the coordinate representation, momentum representation, P-representation, Q-representation, R-representation, Fock-space representation, Wigner function, and characteristic function. The representative that has been used

most for the quantum Brownian motion is the coordinate representation which is most suitable for the path-integral approach. The orthodox phase-space approach employs the Wigner function as the representative since it serves as a quasi-probability distribution over phase space. However, as we will show below, the best representative for problems involving reduction is the characteristic function, which is the symplectic Fourier transform of the Wigner function. In the following, we shall study in detail the aforementioned three representatives of the density operator.

3.1 Definitions of the Representatives

3.1.1 Coordinate Representation

In the coordinate representation, an N-mode density operator $\hat{\varrho}$ is represented by the kernel function $\varrho(\boldsymbol{x}, \boldsymbol{y})$ which is written symbolically as

$$\varrho(\boldsymbol{x}, \boldsymbol{y}) = \langle \boldsymbol{x} | \hat{\varrho} | \boldsymbol{y} \rangle, \tag{3.4}$$

where $\boldsymbol{x}$ and $\boldsymbol{y}$ are two vectors in the N-dimensional configuration space. We shall call $\varrho(\boldsymbol{x}, \boldsymbol{y})$ the coordinate representation of $\hat{\varrho}$ for short. The normalization condition corresponding to (3.1) is

$$Tr(\hat{\varrho}) = \int_{-\infty}^{+\infty} d^N x \, \varrho(\boldsymbol{x}, \boldsymbol{x}) = 1. \tag{3.5}$$

3.1.2 Wigner Function

The Wigner function [6, 47, 70, 86, 90, 101] $W(\boldsymbol{z}) = W(\boldsymbol{x}, \boldsymbol{k})$ of an N-mode density operator $\hat{\varrho}$ is defined via $\varrho(\boldsymbol{x}, \boldsymbol{y})$ of the same density operator:

$$W(\boldsymbol{x}, \boldsymbol{k}) = \pi^{-N} \int_{-\infty}^{+\infty} d^N y \exp\{2i\boldsymbol{k} \cdot \boldsymbol{y}\} \, \varrho(\boldsymbol{x} - \boldsymbol{y}, \boldsymbol{x} + \boldsymbol{y}). \tag{3.6}$$

The normalization condition of the Wigner function corresponding to (3.1) is

$$\int_{-\infty}^{+\infty} d^{2N} z \, W(\boldsymbol{z}) = 1. \tag{3.7}$$

The Wigner function defined above can be expressed in the following representation-independent form [9, 68, 78]:

$$W(\boldsymbol{z}) = Tr\Big[\hat{\varrho}\hat{\Delta}_W(\boldsymbol{z})\Big], \tag{3.8}$$

where $\hat{\Delta}_W(\boldsymbol{z})$ is the Wigner operator defined in Sec. 1.3.2. Since $\hat{\Delta}_W(\boldsymbol{z})$ is a Hermitian operator, the Wigner function is real-valued. However, it is not always positive definite and is thus called the (quantum) quasi-probability distribution function over the "phase space" $\boldsymbol{z} = (\boldsymbol{x}, \boldsymbol{k})$.

For the coherent state (1.39) with the density operator $\hat{\varrho} = |\boldsymbol{z}_c\rangle\langle\boldsymbol{z}_c|$, the Wigner function can be calculated using (3.8) as

$$W(\boldsymbol{z}) = \pi^{-N} \exp\Big\{-(\boldsymbol{z} - \boldsymbol{z}_c)\mathbf{g}(\boldsymbol{z} - \boldsymbol{z}_c)^{\mathsf{T}}\Big\}. \tag{3.9}$$

3.1.3 Characteristic Function

The characteristic function [3, 9, 33, 43, 47, 65, 68, 70, 96] $\Phi(\boldsymbol{z}) = \Phi(\boldsymbol{x}, \boldsymbol{k})$ of an N-mode density operator $\hat{\varrho}$ is defined as the symplectic Fourier transform of the Wigner function $W(\boldsymbol{z})$ of the same density operator:

$$\Phi(\boldsymbol{z}) = \int_{-\infty}^{+\infty} d^{2N}\zeta \, \exp\{-i\boldsymbol{\zeta}\mathbf{J}\boldsymbol{z}^{\mathsf{T}}\} \, W(\boldsymbol{\zeta}). \tag{3.10}$$

The normalization condition of the characteristic function corresponding to (3.1) can be easily derived from (3.7) as

$$\Phi(\mathbf{0}) = 1. \tag{3.11}$$

Corresponding to (3.8), the characteristic function of a density operator $\hat{\varrho}$ can also be expressed in the following representation-independent form:

$$\Phi(\boldsymbol{z}) = Tr\Big[\hat{\varrho}\hat{D}(-\boldsymbol{z})\Big], \tag{3.12}$$

which is a direct consequence of (1.53). Since $\hat{D}(-\boldsymbol{z})$ is a unitary operator, $\Phi(\boldsymbol{z})$ is complex in general. From (3.10), it is obvious that $\Phi^*(\boldsymbol{z}) = \Phi(-\boldsymbol{z})$.

Corresponding to (3.9), the characteristic function of the coherent state (1.39) is

$$\Phi(\boldsymbol{z}) = \exp\Big\{-\tfrac{1}{4}\boldsymbol{z}\mathbf{g}\boldsymbol{z}^{\mathsf{T}} + i\boldsymbol{z}\mathbf{J}\boldsymbol{z}_c^{\mathsf{T}}\Big\}. \tag{3.13}$$

3.2 Transformations among the Representatives

Let us first list all of the transformations among $\varrho(\boldsymbol{x},\boldsymbol{y})$, $W(\boldsymbol{z})$, and $\Phi(\boldsymbol{z})$ as follows:

$$\begin{aligned}\varrho(\boldsymbol{x},\boldsymbol{y}) &= \int_{-\infty}^{+\infty} d^N k \exp\{i\boldsymbol{k}\cdot(\boldsymbol{x}-\boldsymbol{y})\}\, W\left(\frac{\boldsymbol{x}+\boldsymbol{y}}{2},\boldsymbol{k}\right)\\ &= (2\pi)^{-N}\int_{-\infty}^{+\infty} d^N k \exp\left\{\tfrac{i}{2}\boldsymbol{k}\cdot(\boldsymbol{x}+\boldsymbol{y})\right\}\Phi(\boldsymbol{x}-\boldsymbol{y},\boldsymbol{k}),\end{aligned} \tag{3.14}$$

$$\begin{aligned}W(\boldsymbol{x},\boldsymbol{k}) &= \pi^{-N}\int_{-\infty}^{+\infty} d^N y \exp\{2i\boldsymbol{k}\cdot\boldsymbol{y}\}\,\varrho(\boldsymbol{x}-\boldsymbol{y},\boldsymbol{x}+\boldsymbol{y})\\ &= W(\boldsymbol{z}) = (2\pi)^{-2N}\int_{-\infty}^{+\infty} d^{2N}\zeta \exp\{-i\zeta\mathsf{J}\boldsymbol{z}^{\mathsf{T}}\}\,\Phi(\zeta),\end{aligned} \tag{3.15}$$

$$\begin{aligned}\Phi(\boldsymbol{x},\boldsymbol{k}) &= \int_{-\infty}^{+\infty} d^N y \exp\{-i\boldsymbol{y}\cdot\boldsymbol{k}\}\,\varrho\left(\boldsymbol{y}+\boldsymbol{x}/2\,,\boldsymbol{y}-\boldsymbol{x}/2\right)\\ &= \Phi(\boldsymbol{z}) = \int_{-\infty}^{+\infty} d^{2N}\zeta \exp\{-i\zeta\mathsf{J}\boldsymbol{z}^{\mathsf{T}}\}\,W(\zeta).\end{aligned} \tag{3.16}$$

In order to discuss the physical interpretation of the relations among these three representatives, we first make a change of variables in $\varrho(\boldsymbol{x},\boldsymbol{y})$:

$$\varrho(\boldsymbol{x},\boldsymbol{y}) \longrightarrow \varrho(\boldsymbol{\alpha},\boldsymbol{\delta}), \tag{3.17}$$

with

$$\boldsymbol{\alpha} \equiv \frac{\boldsymbol{x}+\boldsymbol{y}}{2}, \qquad \boldsymbol{\delta} \equiv \boldsymbol{x}-\boldsymbol{y}. \tag{3.18}$$

We can then express both the Wigner function and the characteristic function as the (ordinary) Fourier transforms of $\varrho(\boldsymbol{\alpha},\boldsymbol{\delta})$ in the following way:

$$W(\boldsymbol{\alpha},\boldsymbol{k}) \propto \mathcal{F}_{\boldsymbol{\delta}\to\boldsymbol{k}}\Big\{\varrho(\boldsymbol{\alpha},\boldsymbol{\delta})\Big\}, \qquad \Phi(\boldsymbol{\delta},\boldsymbol{k}) \propto \mathcal{F}_{\boldsymbol{\alpha}\to\boldsymbol{k}}\Big\{\varrho(\boldsymbol{\alpha},\boldsymbol{\delta})\Big\}. \tag{3.19}$$

where $\mathcal{F}_{\boldsymbol{\alpha}\to\boldsymbol{k}}$ and $\mathcal{F}_{\boldsymbol{\delta}\to\boldsymbol{k}}$ denote the Fourier transforms on the variables $\boldsymbol{\alpha}$ and $\boldsymbol{\delta}$, respectively, to a new space corresponding to $\boldsymbol{k}$. Hence we see that $W(\boldsymbol{z})$ and $\Phi(\boldsymbol{z})$ form a symplectic Fourier transform pair via the following correspondence:

$$(\boldsymbol{\alpha},\boldsymbol{k}) \in W(\boldsymbol{\alpha},\boldsymbol{k}) \Longleftrightarrow (\boldsymbol{k},\boldsymbol{\delta}) \in \Phi(\boldsymbol{\delta},\boldsymbol{k}). \tag{3.20}$$

Since the Wigner function $W(\boldsymbol{\alpha}, \boldsymbol{k})$ behaves as a quasi-probability distribution over the "phase space" $(\boldsymbol{\alpha}, \boldsymbol{k})$, we find that $\boldsymbol{\alpha}$ corresponds to the classical coordinate, and $\boldsymbol{k}$, which is from the Fourier transform of $\boldsymbol{\delta}$, corresponds to the classical momentum. By contrast, neither of the two arguments in $\Phi(\boldsymbol{\delta}, \boldsymbol{k})$ has a classical correspondent.

3.3 Mean Vectors and Covariance Matrices

For an N-mode (pure or mixed) state with the density operator $\hat{\varrho}$, the mean vector in the $2N$-dimensional phase space is defined as

$$\langle \hat{\boldsymbol{r}} \rangle = Tr(\hat{\varrho}\hat{\boldsymbol{r}}), \tag{3.21}$$

and the covariance matrix is defined as a $2N \times 2N$ symmetric matrix:

$$\begin{aligned}
\boldsymbol{\Sigma} &= \left\langle \left(\hat{\boldsymbol{r}} - \langle \hat{\boldsymbol{r}} \rangle\right)^{\mathsf{T}} \left(\hat{\boldsymbol{r}} - \langle \hat{\boldsymbol{r}} \rangle\right) \right\rangle - \tfrac{i}{2}\mathsf{J} \\
&= \langle \hat{\boldsymbol{r}}^{\mathsf{T}} \hat{\boldsymbol{r}} \rangle - \langle \hat{\boldsymbol{r}} \rangle^{\mathsf{T}} \langle \hat{\boldsymbol{r}} \rangle - \tfrac{i}{2}\mathsf{J} \\
&= \tfrac{1}{2}\left(\langle \hat{\boldsymbol{r}}^{\mathsf{T}} \hat{\boldsymbol{r}} \rangle + \langle \hat{\boldsymbol{r}}^{\mathsf{T}} \hat{\boldsymbol{r}} \rangle^{\mathsf{T}}\right) - \langle \hat{\boldsymbol{r}} \rangle^{\mathsf{T}} \langle \hat{\boldsymbol{r}} \rangle \\
&\equiv \begin{pmatrix} \boldsymbol{\sigma}_{qq} & \boldsymbol{\sigma}_{qp} \\ \boldsymbol{\sigma}_{qp}^{\mathsf{T}} & \boldsymbol{\sigma}_{pp} \end{pmatrix},
\end{aligned} \tag{3.22}$$

with

$$\boldsymbol{\sigma}_{qq,ij} \equiv \left\langle \left(\hat{q}_i - \langle \hat{q}_i \rangle\right)\left(\hat{q}_j - \langle \hat{q}_j \rangle\right) \right\rangle = \langle \hat{q}_i \hat{q}_j \rangle - \langle \hat{q}_i \rangle \langle \hat{q}_j \rangle, \tag{3.23}$$

$$\boldsymbol{\sigma}_{pp,ij} \equiv \left\langle \left(\hat{p}_i - \langle \hat{p}_i \rangle\right)\left(\hat{p}_j - \langle \hat{p}_j \rangle\right) \right\rangle = \langle \hat{p}_i \hat{p}_j \rangle - \langle \hat{p}_i \rangle \langle \hat{p}_j \rangle, \tag{3.24}$$

$$\begin{aligned}
\boldsymbol{\sigma}_{qp,ij} &\equiv \tfrac{1}{2}\left\langle \left(\hat{q}_i - \langle \hat{q}_i \rangle\right)\left(\hat{p}_j - \langle \hat{p}_j \rangle\right) + \left(\hat{p}_j - \langle \hat{p}_j \rangle\right)\left(\hat{q}_i - \langle \hat{q}_i \rangle\right) \right\rangle \\
&= \left\langle \frac{\hat{q}_i \hat{p}_j + \hat{p}_j \hat{q}_i}{2} \right\rangle - \langle \hat{q}_i \rangle \langle \hat{p}_j \rangle.
\end{aligned} \tag{3.25}$$

There is no constraint on the mean vector (3.21), while the covariance matrix (3.22) must satisfy the "generalized uncertainty relations," i.e., all of the symplectic eigenvalues (as defined in Sec. 1.2.3) of $\boldsymbol{\Sigma}$ must be greater than or equal to $\frac{1}{2}$ [21, 84].

For the elements in the 2×2 covariance matrix $[\![\boldsymbol{\Sigma}]\!]$ which correspond to the 0-th mode, i.e., the Brownian particle, we shall use the following notations:

$$[\![\boldsymbol{\Sigma}]\!] = \begin{pmatrix} \boldsymbol{\sigma}_{qq,00} & \boldsymbol{\sigma}_{qp,00} \\ \boldsymbol{\sigma}_{qp,00} & \boldsymbol{\sigma}_{pp,00} \end{pmatrix} \equiv \begin{pmatrix} \sigma_{qq} & \sigma_{qp} \\ \sigma_{qp} & \sigma_{pp} \end{pmatrix}. \tag{3.26}$$

3.4 Gaussian States

The Gaussian state is defined as a quantum state whose Wigner function is a Gaussian distribution in z:

$$W(z) = C_N \exp\left\{-(z - z_c)\mathsf{M}(z - z_c)^{\mathsf{T}}\right\}, \tag{3.27}$$

where $C_N = \pi^{-N}\sqrt{\det(\mathsf{M})}$ is the normalization constant, z_c is a constant vector in the $2N$-dimensional phase space, and M is a symmetric and positive definite matrix. The mean vector of (3.27) is z_c, and the covariance matrix is

$$\Sigma = \tfrac{1}{2}\mathsf{M}^{-1}. \tag{3.28}$$

According to the generalized uncertainty relations discussed in Sec. 3.3, each symplectic eigenvalue of M must be smaller than or equal to 1, otherwise (3.27) will not correspond to a physical state [84]. Hence we have

$$0 < \det(\mathsf{M}) \leq 1, \tag{3.29}$$

where the equal sign holds if and only if (3.27) corresponds to a pure state, which is in general a squeezed coherent state as defined in (1.37). As a special case, the Gaussian Wigner function (3.27) becomes (3.9), the Wigner function for coherent states, when $\mathsf{M} = \mathsf{g}$.

Since a Gaussian distribution is completely determined by its first and second moments, the Gaussian state (3.27) can be determined solely by z_c and Σ. Therefore, instead of using the density operator or its representatives, we can simply use the representation-independent z_c and Σ to represent a Gaussian state.

The Wigner ellipsoid corresponding to (3.27) is defined as

$$(z - z_c)\mathsf{M}(z - z_c)^{\mathsf{T}} = 1, \tag{3.30}$$

which is an ellipsoid in the $2N$-dimensional phase space with its center at z_c and its shape determined by M. Eqs. (3.27) and (3.30) are mathematically equivalent since, as just mentioned, a Gaussian distribution is completely determined by its first and second moments. Therefore we can use the Wigner ellipsoid as a geometric representation of the Gaussian Wigner function, hence the Gaussian state, in phase space [64].

The characteristic function corresponding to the Gaussian Wigner function (3.27) is a complex Gaussian function of $\boldsymbol{z}$:

$$\Phi(\boldsymbol{z}) = \exp\left\{-\tfrac{1}{2}\boldsymbol{z}\mathsf{J}^{\mathsf{T}}\boldsymbol{\Sigma}\mathsf{J}\boldsymbol{z}^{\mathsf{T}} + i\boldsymbol{z}\mathsf{J}\boldsymbol{z}_c^{\mathsf{T}}\right\}. \tag{3.31}$$

By analogy to the Wigner ellipsoid, the characteristic ellipsoid for a Gaussian characteristic function is defined as

$$(\boldsymbol{z} - \boldsymbol{z}_c)\boldsymbol{\Sigma}(\boldsymbol{z} - \boldsymbol{z}_c)^{\mathsf{T}} = 1. \tag{3.32}$$

The center of the characteristic ellipsoid is the same as that of the Wigner ellipsoid, while the shape is determined by the covariance matrix $\boldsymbol{\Sigma}$. This characteristic ellipsoid can also serve as a geometric representation of the Gaussian state in phase space [105].

3.5 Thermal States

We define the thermal state of a time-independent quantum system immersed in an ideal (non-dissipative) heat bath of temperature β^{-1} as the canonical ensemble with the canonical density operator

$$\hat{\varrho}_\beta \equiv \frac{\exp\{-\beta\hat{H}\}}{Tr\left[\exp\{-\beta\hat{H}\}\right]}, \tag{3.33}$$

where $\hat{H} = \hat{H}(\hat{\boldsymbol{r}})$ is the Hamiltonian of the system.

Consider an N-mode system with the inhomogeneously quadratic Hamiltonian

$$\hat{H}(\hat{\boldsymbol{r}}) = \tfrac{1}{2}\hat{\boldsymbol{r}}\mathsf{M}\hat{\boldsymbol{r}}^{\mathsf{T}} + \boldsymbol{n}\hat{\boldsymbol{r}}^{\mathsf{T}}, \tag{3.34}$$

where M is a symmetric and positive definite matrix as defined in Theorem 1.2.3, and $\boldsymbol{n}$ is an arbitrary $2N$-dimensional row vector. The Wigner function and the characteristic function of the thermal state of this system can be calculated using the results in Secs. 1.2 and 1.3 as follows [104]:

Firstly, let us transform the Hamiltonian $\hat{H}(\hat{\boldsymbol{r}})$ in (3.34) into the following form:

$$\begin{aligned}\hat{H}(\hat{\boldsymbol{r}}) &= \tfrac{1}{2}(\hat{\boldsymbol{r}} - \boldsymbol{z}_1)\mathsf{M}(\hat{\boldsymbol{r}} - \boldsymbol{z}_1)^{\mathsf{T}} - \tfrac{1}{2}\boldsymbol{z}_1\mathsf{M}\boldsymbol{z}_1^{\mathsf{T}} \\ &\equiv \hat{D}(\boldsymbol{z}_1)\hat{S}(\mathsf{S}_1)\hat{H}_N(\hat{\boldsymbol{r}})\hat{S}^\dagger(\mathsf{S}_1)\hat{D}^\dagger(\boldsymbol{z}_1) - \tfrac{1}{2}\boldsymbol{z}_1\mathsf{M}\boldsymbol{z}_1^{\mathsf{T}},\end{aligned} \tag{3.35}$$

where

$$z_1 \equiv -n\mathsf{M}^{-1}, \tag{3.36}$$

and

$$\hat{H}_N(\hat{r}) \equiv \frac{1}{2}\hat{r}\begin{pmatrix} \mathbf{\Omega} & \mathbf{0} \\ \mathbf{0} & \mathbf{\Omega} \end{pmatrix}\hat{r}^{\mathsf{T}}, \tag{3.37}$$

with S_1 and $\mathbf{\Omega}$ defined as in Theorem 1.2.3.

Secondly, substitute (3.35) into (3.33), then the latter becomes

$$\begin{aligned} \hat{\varrho}_\beta &= \frac{\hat{D}(z_1)\hat{S}(\mathsf{S}_1)\exp\{-\beta\hat{H}_N\}\hat{S}^\dagger(\mathsf{S}_1)\hat{D}^\dagger(z_1)}{Tr\Big[\exp\{-\beta\hat{H}_N\}\Big]} \\ &\equiv \hat{D}(z_1)\hat{S}(\mathsf{S}_1)\hat{\varrho}_{\beta,N}\hat{S}^\dagger(\mathsf{S}_1)\hat{D}^\dagger(z_1), \end{aligned} \tag{3.38}$$

where

$$\hat{\varrho}_{\beta,N} \equiv \frac{\exp\{-\beta\hat{H}_N\}}{Tr\Big[\exp\{-\beta\hat{H}_N\}\Big]}. \tag{3.39}$$

Thirdly, according to (3.8) the Wigner function of the density operator $\hat{\varrho}_\beta$ is

$$\begin{aligned} W_\beta(z) &= Tr\left[\hat{D}(z_1)\hat{S}(\mathsf{S}_1)\hat{\varrho}_{\beta,N}\hat{S}^\dagger(\mathsf{S}_1)\hat{D}^\dagger(z_1)\hat{\Delta}_W(z)\right] \\ &= Tr\left[\hat{\varrho}_{\beta,N}\hat{S}^\dagger(\mathsf{S}_1)\hat{D}^\dagger(z_1)\hat{\Delta}_W(z)\hat{D}(z_1)\hat{S}(\mathsf{S}_1)\right] \\ &= Tr\left[\hat{\varrho}_{\beta,N}\hat{\Delta}_W\Big((z-z_1)\mathsf{S}_1^{\mathsf{T}}\Big)\right], \end{aligned} \tag{3.40}$$

where (1.56) has been used.

Finally, recall that for a one-dimensional harmonic oscillator with the Hamiltonian

$$\begin{aligned} \hat{H} &= \frac{\hat{p}^2}{2m} + \frac{1}{2}m\omega^2\hat{q}^2 \\ &= \frac{1}{2}\Big(\hat{q},\hat{p}\Big)\mathsf{g}_0^{\frac{1}{2}}\begin{pmatrix} \omega & 0 \\ 0 & \omega \end{pmatrix}\mathsf{g}_0^{\frac{1}{2}}\begin{pmatrix} \hat{q} \\ \hat{p} \end{pmatrix}, \end{aligned} \tag{3.41}$$

the Wigner function of the thermal state is [47]

$$\begin{aligned} W_\beta(x,k) &= \frac{\tanh(\beta\omega/2)}{\pi}\exp\left\{-\tanh(\beta\omega/2)\Big(m\omega x^2 + \frac{k^2}{m\omega}\Big)\right\} \\ &= \frac{\tanh(\beta\omega/2)}{\pi}\exp\left\{-\Big(x,k\Big)\mathsf{g}_0^{\frac{1}{2}}\begin{pmatrix} \tanh(\beta\omega/2) & 0 \\ 0 & \tanh(\beta\omega/2) \end{pmatrix}\mathsf{g}_0^{\frac{1}{2}}\begin{pmatrix} x \\ k \end{pmatrix}\right\}. \end{aligned} \tag{3.42}$$

It follows that the explicit expression of (3.40) is

$$W_\beta(z) = C_N(\beta)\exp\left\{-(z-z_1)\mathsf{S}_1^\top\begin{pmatrix}\tanh(\beta\boldsymbol{\Omega}/2) & \mathbf{0}\\ \mathbf{0} & \tanh(\beta\boldsymbol{\Omega}/2)\end{pmatrix}\mathsf{S}_1(z-z_1)^\top\right\}$$

$$= C_N(\beta)\exp\left\{-(z-z_1)\mathsf{J}^\top\tan(\beta\mathsf{J}\mathsf{M}/2)(z-z_1)^\top\right\}, \tag{3.43}$$

where

$$\tanh(\beta\boldsymbol{\Omega}/2) = \mathrm{diag}\left\{\tanh(\beta\Omega_0/2), \tanh(\beta\Omega_1/2), \cdots, \tanh(\beta\Omega_n/2)\right\}, \tag{3.44}$$

and

$$C_N(\beta) \equiv \pi^{-N}\det\left(\tanh(\beta\boldsymbol{\Omega}/2)\right). \tag{3.45}$$

Therefore we find that the thermal state is a Gaussian state if $\hat{H}$ is (inhomogeneously) quadratic. The covariance matrix corresponding to (3.43) is

$$\boldsymbol{\Sigma}_\beta = \tfrac{1}{2}\cot(\beta\mathsf{J}\mathsf{M}/2)\mathsf{J} = \frac{1}{2}\mathsf{S}_1^{-1}\begin{pmatrix}\coth(\beta\boldsymbol{\Omega}/2) & \mathbf{0}\\ \mathbf{0} & \coth(\beta\boldsymbol{\Omega}/2)\end{pmatrix}\mathsf{S}_1^{-\top}. \tag{3.46}$$

According to (3.31), the characteristic function corresponding to (3.43) takes the form

$$\Phi_\beta(z) = \exp\left\{-\tfrac{1}{2}z\mathsf{J}^\top\boldsymbol{\Sigma}_\beta\mathsf{J}z^\top + iz\mathsf{J}z_1^\top\right\}$$

$$= \exp\left\{-\frac{1}{4}z\mathsf{S}_1^\top\begin{pmatrix}\coth(\beta\boldsymbol{\Omega}/2) & \mathbf{0}\\ \mathbf{0} & \coth(\beta\boldsymbol{\Omega}/2)\end{pmatrix}\mathsf{S}_1 z^\top + iz\mathsf{J}z_1^\top\right\}. \tag{3.47}$$

The one-mode characteristic function corresponding to (3.42) is a special case of (3.47):

$$\Phi_\beta(x,k) = \exp\left\{-\frac{1}{4}\coth(\beta\omega/2)\left(m\omega x^2 + \frac{k^2}{m\omega}\right)\right\}$$

$$= \exp\left\{-\frac{1}{4}\coth(\beta\omega/2)\left(x,k\right)\mathsf{g}_0\begin{pmatrix}x\\ k\end{pmatrix}\right\}, \tag{3.48}$$

which will be useful for later discussion.

Chapter 4

Phase-Space Approach to Quantum Mechanics

It is well known that the uncertainty principle makes the concept of phase space improper in quantum mechanics, since we cannot have a well-defined point in the phase space which corresponds to precise and simultaneous measurements of both the position and momentum of a particle. Therefore a genuine probability distribution function over phase space does not exist in quantum mechanics. Nevertheless, the Wigner function defined in Chap. 3, which serves as a quasi-probability distribution function over the "phase space" made of its arguments $\boldsymbol{z} = (\boldsymbol{x}, \boldsymbol{k})$, has proved to be very useful in many branches of quantum mechanics, especially in those problems involving classical-quantum correspondence.

The phase-space approach (or picture) to quantum mechanics, also known as the Weyl–Wigner–Moyal formalism [3, 70, 86, 90, 99, 101], serves as an alternative formalism of quantum mechanics that incorporates the Weyl correspondence rule with the Wigner function. In this approach the Wigner function plays the central role, as the wave function or the density operator does in other approaches to quantum mechanics (Schrödinger, Heisenberg, density-operator or path-integral). In contrast to other approaches, there is no operator in the phase-space approach. In other words, the phase-space approach resembles classical statistical mechanics; all operators are replaced by the corresponding c-number variables, known as the Weyl symbols, and the expectation value of an operator becomes the average of the corresponding symbol over phase

space with respect to the Wigner function. This approach is particular useful when the Hamiltonian is (inhomogeneously) quadratic, i.e., when the system is linear, wherein all formulas are formally isomorphic to those in classical mechanics, and the solutions of the corresponding classical equations of motion completely determine the quantum dynamics.

4.1 Weyl Symbols and the Weyl–Wigner Correspondence

As we discussed above, all operators have to be transformed into the equivalent Weyl symbols in the phase-space approach. There are many equivalent definitions of the Weyl symbol; in this paper we define the Weyl symbol $f_W(z)$ corresponding to an N-mode operator $\hat{f}(\hat{r})$ via the following relation:

$$\hat{f}(\hat{r}) = \int_{-\infty}^{+\infty} d^{2N}z\, f_W(z)\hat{\Delta}_W(z), \tag{4.1}$$

where $\hat{\Delta}_W(z)$ is the Wigner operator defined in Sec. 1.3.2. The Weyl symbol is mathematically equivalent to the original operator since (4.1) is invertible:

$$f_W(z) = (2\pi)^N tr\Big(\hat{f}(\hat{r})\hat{\Delta}_W(z)\Big), \tag{4.2}$$

where (1.63) has been used.

Comparing (4.2) with (3.8), we see that the Weyl symbol of a density operator $\hat{\varrho}$ is proportional to the Wigner function of the same density operator (the Weyl–Wigner correspondence):

$$W(z) = (2\pi)^{-N}\Big(\text{Weyl symbol of } \hat{\varrho}\Big). \tag{4.3}$$

From the formulas in Sec. 1.3.3, we have the following two useful relations:

$$tr\Big(\hat{f}(\hat{r})\Big) = (2\pi)^{-N}\int_{-\infty}^{+\infty} d^{2N}z\, f_W(z), \tag{4.4}$$

$$tr\Big(\hat{f}(\hat{r})\hat{g}(\hat{r})\Big) = tr\Big(\hat{g}(\hat{r})\hat{f}(\hat{r})\Big) = (2\pi)^{-N}\int_{-\infty}^{+\infty} d^{2N}z\, f_W(z)g_W(z). \tag{4.5}$$

Eq. (4.5) contains the following two formulas as special cases:

$$Tr\left(\hat{\varrho}^2\right) = (2\pi)^N \int_{-\infty}^{+\infty} d^{2N}z \left[W(z)\right]^2, \tag{4.6}$$

$$\left\langle \hat{f}(\hat{r}) \right\rangle = Tr\left(\hat{\varrho}\hat{f}(\hat{r})\right) = \int_{-\infty}^{+\infty} d^{2N}z\, W(z) f_W(z). \tag{4.7}$$

Using (4.7), we are able to calculate the expectation value of an operator as the average of its Weyl symbol over phase space with respect to the Wigner function.

From (1.53), we see that the Weyl symbol of the Weyl operator $\hat{D}(z_c)$ is $\exp\{iz\mathsf{J}z_c^{\mathsf{T}}\}$, which is formally isomorphic to $\hat{D}(z_c)$. As a special case, the Weyl symbol of the identity operator $\hat{\mathbf{1}}$ is 1.

The Weyl symbol $f_W(z)$ of the operator $\hat{f}(\hat{r})$ is also known as the Weyl correspondent of $\hat{f}(\hat{r})$ by the Weyl correspondence rule (the symmetrization rule) [99]. This correspondence can be obtained via the isomorphism between $\hat{D}(z_c)$ and $\exp\{iz\mathsf{J}z_c^{\mathsf{T}}\}$ by comparing their series expansions in z_c. The following Weyl correspondence will be useful in later discussion:

$$\begin{pmatrix} \hat{q} \\ \hat{p} \\ \hat{q}^2 \\ \hat{p}^2 \\ \hat{q}\hat{p} + \hat{p}\hat{q} \end{pmatrix} \Longleftrightarrow \begin{pmatrix} x \\ k \\ x^2 \\ k^2 \\ 2xk \end{pmatrix}. \tag{4.8}$$

4.2 Characteristic Symbols

The characteristic symbol $f_\Phi(z)$ of an N-mode operator $\hat{f}(\hat{r})$ is defined analogously to the Weyl symbol via the relation

$$\hat{f}(\hat{r}) = \int_{-\infty}^{+\infty} d^{2N}z\, f_\Phi(z)\hat{D}(z). \tag{4.9}$$

From (1.62), the inverse of the above relation is

$$f_\Phi(z) = (2\pi)^{-N} tr\left(\hat{f}(\hat{r})\hat{D}(-z)\right), \tag{4.10}$$

hence the characteristic symbol is also mathematically equivalent to the original operator. Moreover, the characteristic symbol and the Weyl symbol for a given operator form a symplectic Fourier transform pair:

$$f_W(z) = \int_{-\infty}^{+\infty} d^{2N}\zeta \, \exp\{-i\zeta \mathsf{J} z^{\mathsf{T}}\} \, f_\Phi(\zeta) \tag{4.11}$$

according to (1.52).

From (4.9), it is obvious that the characteristic symbol of the Weyl operator $\hat{D}(z_c)$ is $\delta(z - z_c)$. As a special case, the characteristic symbol of the identity operator $\hat{\mathbf{1}}$ is $\delta(z)$. The following six formulas are the analogues of (4.3)–(4.8):

$$\Phi(z) = (2\pi)^N \Big(\text{characteristic symbol of } \hat{\varrho}\Big), \tag{4.12}$$

$$tr\Big(\hat{f}(\hat{r})\Big) = (2\pi)^N f_\Phi(\mathbf{0}), \tag{4.13}$$

$$\begin{aligned} tr\Big(\hat{f}(\hat{r})\hat{g}(\hat{r})\Big) &= tr\Big(\hat{g}(\hat{r})\hat{f}(\hat{r})\Big) \\ = (2\pi)^N \int_{-\infty}^{+\infty} d^{2N}z \, f_\Phi(z) g_\Phi(-z) &= (2\pi)^N \int_{-\infty}^{+\infty} d^{2N}z \, f_\Phi(-z) g_\Phi(z), \end{aligned} \tag{4.14}$$

$$Tr\Big(\hat{\varrho}^2\Big) = (2\pi)^{-N} \int_{-\infty}^{+\infty} d^{2N}z \, |\Phi(z)|^2, \tag{4.15}$$

$$\Big\langle \hat{f}(\hat{r}) \Big\rangle = Tr\Big(\hat{\varrho}\hat{f}(\hat{r})\Big) = \int_{-\infty}^{+\infty} d^{2N}z \, \Phi(z) f_\Phi(-z), \tag{4.16}$$

$$\begin{pmatrix} \hat{q} \\ \hat{p} \\ \hat{q}^2 \\ \hat{p}^2 \\ \hat{q}\hat{p} + \hat{p}\hat{q} \end{pmatrix} \Longleftrightarrow \begin{pmatrix} i\delta(z)_{,k} \\ -i\delta(z)_{,x} \\ -\delta(z)_{,kk} \\ -\delta(z)_{,xx} \\ 2\delta(z)_{,xk} \end{pmatrix}, \tag{4.17}$$

where

$$\delta(z)_{,k} \equiv \frac{\partial \delta(z)}{\partial k}, \quad \delta(z)_{,xk} \equiv \frac{\partial^2 \delta(z)}{\partial x \partial k}, \text{ etc.} \tag{4.18}$$

From (4.16) and (4.17), it follows that

$$\langle \hat{q} \rangle = Tr\left(\hat{\varrho}\hat{q}\right) = i\left[\frac{\partial \Phi(z)}{\partial k}\right]_{z=0}, \tag{4.19}$$

$$\langle \hat{p} \rangle = Tr\left(\hat{\varrho}\hat{p}\right) = -i\left[\frac{\partial \Phi(z)}{\partial x}\right]_{z=0}, \tag{4.20}$$

$$\left\langle \hat{q}^2 \right\rangle = Tr\left(\hat{\varrho}\hat{q}^2\right) = -\left[\frac{\partial^2 \Phi(z)}{\partial k^2}\right]_{z=0}, \tag{4.21}$$

$$\left\langle \hat{p}^2 \right\rangle = Tr\left(\hat{\varrho}\hat{p}^2\right) = -\left[\frac{\partial^2 \Phi(z)}{\partial x^2}\right]_{z=0}, \tag{4.22}$$

$$\left\langle \frac{\hat{q}\hat{p}+\hat{p}\hat{q}}{2} \right\rangle = Tr\left(\hat{\varrho}\left(\frac{\hat{q}\hat{p}+\hat{p}\hat{q}}{2}\right)\right) = \left[\frac{\partial^2 \Phi(z)}{\partial x \partial k}\right]_{z=0}. \tag{4.23}$$

4.3 Time Evolution of the Wigner and Characteristic Functions

For a general quantum system with the Hamiltonian $\hat{H} = \hat{H}(\hat{r};t)$, the quantum dynamics of this system can be completely determined by the von Neumann–Landau equation (also known as the quantum Liouville equation), which is the equation of motion of the density operator $\hat{\varrho}$ [86]:

$$\frac{d\hat{\varrho}}{dt} = \frac{\partial \hat{\varrho}}{\partial t} + i[\hat{H}, \hat{\varrho}] = 0. \tag{4.24}$$

This equation can be taken as the fundamental equation of quantum mechanics since it is equivalent to the Schrödinger equation and the Heisenberg equation. The formal solution of (4.24) is

$$\hat{\varrho}(t) = \hat{\mathcal{U}}(t)\hat{\varrho}(0)\hat{\mathcal{U}}^{\dagger}(t), \tag{4.25}$$

where $\hat{\mathcal{U}}(t)$ is the unitary time-evolution operator which satisfies the Schrödinger equation

$$i\frac{\partial}{\partial t}\hat{\mathcal{U}}(t) = \hat{H}\hat{\mathcal{U}}(t), \qquad \hat{\mathcal{U}}(0) = \hat{1}. \tag{4.26}$$

The equation of motion of the Wigner function can be derived from (4.24) as [6, 47, 86]

$$\frac{\partial}{\partial t}W(\boldsymbol{z};t)+2H(\boldsymbol{z};t)\sin\left(\tfrac{1}{2}\overleftrightarrow{\partial}\right)W(\boldsymbol{z};t)=0, \tag{4.27}$$

where $H(\boldsymbol{z};t)$ is the Weyl symbol of $\hat{H}(\hat{\boldsymbol{r}};t)$, and

$$\overleftrightarrow{\partial}\equiv\sum_j\left(\frac{\overleftarrow{\partial}}{\partial k_j}\frac{\overrightarrow{\partial}}{\partial x_j}-\frac{\overleftarrow{\partial}}{\partial x_j}\frac{\overrightarrow{\partial}}{\partial k_j}\right), \tag{4.28}$$

with the arrows indicating in which direction the derivatives act.

If we restrict the Hamiltonian $\hat{H}(\hat{\boldsymbol{r}};t)$ to be (inhomogeneously) quadratic, then (4.27) degenerates to the classical Liouville equation,

$$\frac{\partial}{\partial t}W(\boldsymbol{z};t)+\sum_j\frac{\partial H}{\partial k_j}\frac{\partial}{\partial x_j}W(\boldsymbol{z};t)-\sum_j\frac{\partial H}{\partial x_j}\frac{\partial}{\partial k_j}W(\boldsymbol{z};t)=0, \tag{4.29}$$

where $H\equiv H(\boldsymbol{z};t)$ is (inhomogeneously) quadratic in $\boldsymbol{z}$ and is in general time-dependent. Using Hamilton's canonical equations in classical mechanics,

$$\dot{x}_j=\frac{\partial H}{\partial k_j},\qquad \dot{k}_j=-\frac{\partial H}{\partial x_j}, \tag{4.30}$$

Eq. (4.29) can be rewritten as

$$\left(\frac{\partial}{\partial t}+\sum_j\dot{x}_j\frac{\partial}{\partial x_j}+\sum_j\dot{k}_j\frac{\partial}{\partial k_j}\right)W(\boldsymbol{z};t)=\frac{d}{dt}W(\boldsymbol{z};t)=0. \tag{4.31}$$

Therefore the time evolution of $\boldsymbol{z}$, i.e., the solutions of the corresponding classical equations of motion (4.30), completely determines the solution of (4.31).

In general, the solutions of (4.30) with respect to a (inhomogeneously) quadratic $H(\boldsymbol{z};t)$ can be denoted as

$$\boldsymbol{z}^{\mathsf{T}}(t)=\mathsf{R}(t)\boldsymbol{z}^{\mathsf{T}}(0)+\boldsymbol{a}^{\mathsf{T}}(t),\quad \mathsf{R}(0)=\begin{pmatrix}\mathsf{I}_N & \mathbf{0}\\ \mathbf{0} & \mathsf{I}_N\end{pmatrix},\ \text{and}\ \boldsymbol{a}(0)=\mathbf{0}. \tag{4.32}$$

Since the time evolution of the classical canonical variables is a canonical transformation, $\mathsf{R}(t)$ is a $2N\times 2N$ symplectic matrix. $\boldsymbol{a}(t)$ is a time-dependent vector in the $2N$-dimensional phase space, which vanishes for all t if and only if $H(\boldsymbol{z};t)$ is homogeneously quadratic. The geometric meaning of $\boldsymbol{a}(t)$ is the trajectory traced by the point which is initially at the origin in phase space. Eq. (4.32) is essentially a time-dependent inhomogeneous linear canonical transformation, and we will call it "phase flow" hereafter.

Using (4.32), the general solution of (4.31) can be expressed as

$$W(\boldsymbol{z};t) = W\Big([\boldsymbol{z} - \boldsymbol{a}(t)]\mathsf{R}^{-\mathsf{T}}(t); t = 0\Big), \tag{4.33}$$

and we say that the time evolution of the Wigner function follows the phase flow in phase space.

The time evolution of the corresponding characteristic function can be obtained from (4.33) via (3.10):

$$\Phi(\boldsymbol{z};t) = \exp\Big\{i\boldsymbol{z}\mathsf{J}\boldsymbol{a}^{\mathsf{T}}(t)\Big\}\Phi\Big(\boldsymbol{z}\mathsf{R}^{-\mathsf{T}}(t); t = 0\Big), \tag{4.34}$$

which is also completely determined by the phase flow. However, the time evolution of the characteristic function follows the phase flow if and only if $\boldsymbol{a}(t)=\boldsymbol{0}$, i.e., if and only if $H(\boldsymbol{z};t)$ is homogeneously quadratic.

4.4 Time Evolution of the Mean Vectors and the Covariance Matrices

For a quantum linear system, the time evolution of the operators $\hat{\boldsymbol{r}}$ in the Heisenberg picture is formally isomorphic to (4.32) via the Weyl correspondence:

$$\hat{\boldsymbol{r}}^{\mathsf{T}}(t) = \mathsf{R}(t)\hat{\boldsymbol{r}}^{\mathsf{T}}(0) + \boldsymbol{a}^{\mathsf{T}}(t). \tag{4.35}$$

For an arbitrary initial state with the mean vector $\langle\hat{\boldsymbol{r}}(0)\rangle$ and the covariance matrix $\boldsymbol{\Sigma}(0)$, the time evolution of the mean vector is a direct consequence of (4.35):

$$\langle\hat{\boldsymbol{r}}(t)\rangle^{\mathsf{T}} = \mathsf{R}(t)\langle\hat{\boldsymbol{r}}(0)\rangle^{\mathsf{T}} + \boldsymbol{a}^{\mathsf{T}}(t), \tag{4.36}$$

and the time evolution of the covariance matrix can be derived by substituting (4.35) into (3.22):

$$\boldsymbol{\Sigma}(t) = \mathsf{R}(t)\boldsymbol{\Sigma}(0)\mathsf{R}^{\mathsf{T}}(t). \tag{4.37}$$

Note that (4.37) is determined solely by $\mathsf{R}(t)$ and $\boldsymbol{\Sigma}(0)$, and is independent of $\langle\hat{\boldsymbol{r}}(0)\rangle$ and $\boldsymbol{a}(t)$. This relation can also be obtained by using (4.7).

Chapter 5

Reduction of Density Operators

5.1 General Theory

Consider a quantum system made of two subsystems (**A**) and (**B**) whose density operator is denoted by $\hat{\varrho}_{AB}$. With respect to this division, a reduction of ignoring the subsystem (**B**) is a commitment that no measurement on (**B**) will be made. After we perform this reduction, an operator $\hat{O}$ originally corresponding to a measurement on the total system reduces to $\hat{O}_A \otimes \hat{\mathbf{1}}$, where $\hat{O}_A$ corresponds to a measurement on (**A**). The expectation value of $\hat{O}_A$ can be calculated as

$$\begin{aligned}
\left\langle \hat{O}_A \right\rangle &= Tr\Big(\hat{\varrho}_{AB}(\hat{O}_A \otimes \hat{\mathbf{1}})\Big) \\
&= Tr_A Tr_B\Big(\hat{\varrho}_{AB}(\hat{O}_A \otimes \hat{\mathbf{1}})\Big) \\
&= Tr_A\Big([Tr_B(\hat{\varrho}_{AB})]\hat{O}_A\Big) \\
&\equiv Tr(\hat{\varrho}_A \hat{O}_A), \qquad (5.1)
\end{aligned}$$

where Tr_A denotes the partial trace operation with respect to the degree(s) of freedom in (**A**), and Tr_B is defined in a similar manner. $\hat{\varrho}_A \equiv Tr_B(\hat{\varrho}_{AB})$ is called the reduced density operator for the subsystem (**A**) which includes the influence from (**B**). The normalization condition (3.1) is an extreme case of $Tr_B(\hat{\varrho}_{AB}) = \hat{\varrho}_A$, where (**A**) is empty and (**B**) is the total system.

5.2 Reduction of a Density Operator via Its Representatives

For the quantum system (A)+(B) discussed in Sec. 5.1, let us assume that the number of degrees of freedom in (A) is $(N-\lambda)$ and that of (B) is λ, and define $\boldsymbol{x} \equiv (\boldsymbol{x}_A, \boldsymbol{x}_B)$, $\boldsymbol{y} \equiv (\boldsymbol{y}_A, \boldsymbol{y}_B)$, and $\boldsymbol{k} \equiv (\boldsymbol{k}_A, \boldsymbol{k}_B)$ according to this division. The corresponding representatives of the reduced density operator $\hat{\varrho}_A = Tr_B(\hat{\varrho}_{AB})$ can be easily obtained as

$$\varrho_A(\boldsymbol{x}_A, \boldsymbol{y}_A) = \int_{-\infty}^{+\infty} d^\lambda x_B \, \varrho_{AB}(\boldsymbol{x}_A, \boldsymbol{x}_B, \boldsymbol{y}_A, \boldsymbol{x}_B), \tag{5.2}$$

$$W_A(\boldsymbol{x}_A, \boldsymbol{k}_A) = \int_{-\infty}^{+\infty} d^\lambda x_B d^\lambda k_B W_{AB}(\boldsymbol{x}_A, \boldsymbol{x}_B, \boldsymbol{k}_A, \boldsymbol{k}_B), \tag{5.3}$$

$$\Phi_A(\boldsymbol{x}_A, \boldsymbol{k}_A) = \Phi_{AB}(\boldsymbol{x}_A, \boldsymbol{0}, \boldsymbol{k}_A, \boldsymbol{0}). \tag{5.4}$$

As we mentioned earlier, the normalization conditions (3.5), (3.7), and (3.11) can be taken as the extreme cases of (5.2), (5.3), and (5.4). Note that (5.3) is an analogue of the marginal probability density in probability theory [53].

Since (5.4) is simply a restriction of the original $\Phi(\boldsymbol{x}_A, \boldsymbol{x}_B, \boldsymbol{k}_A, \boldsymbol{k}_B)$ to a subspace in the $2N$-dimensional phase space, the reduction becomes a geometric operation (a projection in phase space) via the characteristic function. Compared with (5.2) and (5.3), it is obvious that the easiest way to perform the reduction is using the characteristic function.

5.3 Reduction of the Gaussian States

As we discussed in Sec. 3.4, a Gaussian state is completely determined by its mean vector and covariance matrix. Therefore the reduction of a Gaussian state can be realized by the corresponding reductions of these two entities. Using the same assumptions as in Sec. 5.2, the reductions of the mean vector $\boldsymbol{z}_{c,AB}$ and the covariance matrix $\boldsymbol{\Sigma}_{AB}$ can be obtained by substituting (3.31) into (5.4):

$$\boldsymbol{z}_{c,AB} = (\boldsymbol{x}_{c,A}, \boldsymbol{x}_{c,B}, \boldsymbol{k}_{c,A}, \boldsymbol{k}_{c,B}) \Longrightarrow \boldsymbol{z}_{c,A} \equiv (\boldsymbol{x}_{c,A}, \boldsymbol{k}_{c,A}), \tag{5.5}$$

and

$$\Sigma_{AB} = \begin{pmatrix} \sigma_{qq} & \sigma_{qp} \\ \sigma_{qp}^{\mathsf{T}} & \sigma_{pp} \end{pmatrix} \Longrightarrow \Sigma_A \equiv \begin{pmatrix} \sigma'_{qq} & \sigma'_{qp} \\ \sigma'^{\mathsf{T}}_{qp} & \sigma'_{pp} \end{pmatrix}, \tag{5.6}$$

where Σ_A is a $2(N-\lambda)\times 2(N-\lambda)$ matrix with the elements

$$\sigma'_{qq,\mu\nu} = \sigma_{qq,\mu\nu}, \tag{5.7}$$

$$\sigma'_{pp,\mu\nu} = \sigma_{pp,\mu\nu}, \tag{5.8}$$

$$\sigma'_{qp,\mu\nu} = \sigma_{qp,\mu\nu}, \tag{5.9}$$

for $\mu, \nu = 0, 1, \ldots, (n-\lambda)$.

Hence we see that the reduced mean vector is a projection of the original mean vector, and the reduced covariance matrix is a submatrix of the original covariance matrix. If we use the characteristic ellipsoid (3.32) as the geometrical representation of the Gaussian state in phase space, then the reduction becomes the restriction of this ellipsoid to a $2(N-\lambda)$-dimensional subspace.

5.4 Time Evolution of the Reduced Density Operators

For a quantum linear system, the time evolution of the Wigner function is given by (4.33) and that of the characteristic function is (4.34). Using the same assumptions as in Sec. 5.2, Eqs. (5.3) and (5.4) give the time evolution of the reduced Wigner function and the reduced characteristic function as follows:

$$\begin{aligned} & W_A(\boldsymbol{x}_A, \boldsymbol{k}_A; t) \\ = & \int_{-\infty}^{+\infty} d^\lambda x_B d^\lambda k_B W_{AB}(\boldsymbol{x}_A, \boldsymbol{x}_B, \boldsymbol{k}_A, \boldsymbol{k}_B; t) \\ = & \int_{-\infty}^{+\infty} d^\lambda x_B d^\lambda k_B W_{AB}\Big([(\boldsymbol{x}_A, \boldsymbol{x}_B, \boldsymbol{k}_A, \boldsymbol{k}_B) - \boldsymbol{a}(t)]\,\mathsf{R}^{-\mathsf{T}}(t); t = 0\Big), \end{aligned} \tag{5.10}$$

$$\begin{aligned} & \Phi_A(\boldsymbol{x}_A, \boldsymbol{k}_A, ; t) \\ = & \exp\Big\{i(\boldsymbol{x}_A, \boldsymbol{0}, \boldsymbol{k}_A, \boldsymbol{0})\mathsf{J}\boldsymbol{a}^{\mathsf{T}}(t)\Big\}\,\Phi_{AB}\Big((\boldsymbol{x}_A, \boldsymbol{0}, \boldsymbol{k}_A, \boldsymbol{0})\mathsf{R}^{-\mathsf{T}}(t); t = 0\Big). \end{aligned} \tag{5.11}$$

Similarly, from (5.2) we have the time evolution of the corresponding reduced coordinate representation:

$$\varrho_A(\boldsymbol{x}_A, \boldsymbol{y}_A; t) = \int_{-\infty}^{+\infty} d^\lambda x_B \, \varrho_{AB}(\boldsymbol{x}_A, \boldsymbol{x}_B, \boldsymbol{y}_A, \boldsymbol{x}_B; t), \tag{5.12}$$

where $\varrho(\boldsymbol{x}_A, \boldsymbol{x}_B, \boldsymbol{y}_A, \boldsymbol{x}_B; t)$ can be solved exactly in terms of the classical action for a quantum linear system [26, 82]. The complexity of (5.12) is similar to that of (5.10).

From (5.11), we see that once the initial (total) characteristic function is obtained, we can write down the time evolution of the characteristic function in terms of the phase flow without doing any integrations. Among all representatives of the density operator, only the characteristic function possesses this advantage. Therefore we conclude that the characteristic function is the best representative for the problems involving reduction.

Part II

The Model

Chapter 6

Equations of Motion and the Solutions

NOTE: Unless otherwise mentioned, the time $t \geq 0$ throughout this chapter.

6.1 The Model Hamiltonians

In the literature, there have been several successful models for the quantum dissipative heat bath [30]. For quantum harmonic Brownian motion, the one used most often is the linear-coupling model [10, 16, 22, 25, 40, 44, 45, 48, 73, 76, 85, 95]. Since the Hamiltonian of the linear-coupling model is not positive definite, a renormalization procedure is necessary. After the renormalization is performed, the linear-coupling model is then equivalent to the independent-oscillator model [28, 29, 30], in which the heat bath is modeled by an infinite set of mutually independent oscillators attached to the Brownian particle by Hooke springs. In this paper, we shall use the independent-oscillator model exclusively without loss of generality.

In the independent-oscillator model, the total system of a harmonically bound Brownian particle immersed in a quantum dissipative heat bath is described by the Hamiltonian

$$\hat{H} = \frac{\hat{p}^2}{2m} + \frac{1}{2}m\omega_0^2\hat{q}^2 + \sum_{\ell}\left[\frac{\hat{p}_\ell^2}{2m_\ell} + \frac{1}{2}m_\ell\omega_\ell^2(\hat{q}_\ell - \hat{q})^2\right], \tag{6.1}$$

where $\hat{q} = \hat{q}_0$ and $\hat{p} = \hat{p}_0$ are the operators for the Brownian particle, $m = m_0$ and m_ℓ's

are the characteristic masses, and ω_j's are the characteristic frequencies defined as in Sec. 1.1. (From now on we shall never drop the subscript "o" in ω_o.) Among the terms in (6.1),

$$\frac{\hat{p}^2}{2m} + \frac{1}{2} m\omega_o^2 \hat{q}^2 \tag{6.2}$$

is the Hamiltonian of the harmonically bound Brownian particle,

$$\sum_\ell \left[\frac{\hat{p}_\ell^2}{2m_\ell} + \frac{1}{2} m_\ell \omega_\ell^2 \hat{q}_\ell^2\right] \tag{6.3}$$

is the Hamiltonian of the heat-bath oscillators,

$$\sum_\ell -m_\ell \omega_\ell^2 \hat{q}_\ell \hat{q} \tag{6.4}$$

corresponds to the interaction, i.e., the linear coupling, between the Brownian particle and the heat bath, and

$$\left(\tfrac{1}{2} \sum_\ell m_\ell \omega_\ell^2\right) \hat{q}^2 \tag{6.5}$$

corresponds to the renormalization counterterm in the linear-coupling model. It is obvious that the Hamiltonian (6.1) is positive definite as long as $\omega_j > 0$. Without loss of generality, we shall assume that all ω_ℓ's are different. The mechanical analogue of (6.1) is shown schematically in Fig. 1.

Without changing the essential structure of the Hamiltonian in (6.1), we can linearly couple the Brownian particle to a classical time-dependent external force by adding the linear term $-\hat{q} f_X(t)$ to (6.1) and get

$$\hat{H}'(t) = \hat{H} - \hat{q} f_X(t). \tag{6.6}$$

Hence the time-independent $\hat{H}$ in (6.1) becomes a special case of this $\hat{H}'(t)$. We shall use both (6.1) and (6.6) as the model Hamiltonians, but note that only the former represents the "total system." The total number of heat-bath oscillators is assumed at first to be finite, and the thermodynamic limit $n \to \infty$ will be taken starting in Chap. 8.

6.2 Classical Equations of Motion

From the discussion in Chap. 4, we know that for a quantum linear system the dynamics is completely determined by the corresponding classical equations of motion.

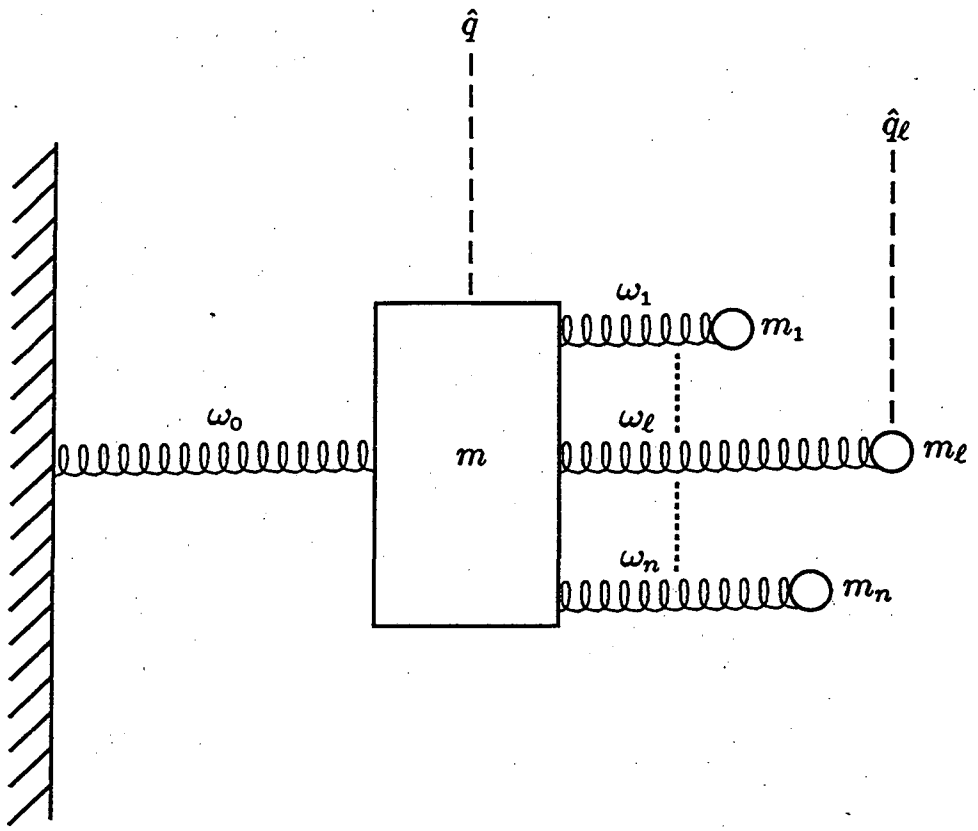

Figure 6.1: Mechanical analogue of the independent-oscillator model. Note that $\hat{q}_j$ locates the center of mass of the j-th oscillator with respect to its balanced position.

Therefore our study of the model Hamiltonians begins with the equations of motion for the classical correspondent of the quantum system described by (6.6).

The corresponding classical Hamiltonian, i.e., the Weyl symbol, of the model Hamiltonian (6.6) is

$$H'(t) = \frac{k^2}{2m} + \frac{1}{2}m\omega_0^2 x^2 + \sum_\ell \left[\frac{k_\ell^2}{2m_\ell} + \frac{1}{2}m_\ell\omega_\ell^2(x_\ell - x)^2\right] - x f_X(t). \tag{6.7}$$

Using Hamilton's canonical equations (4.30), we have the following equations of motion for this corresponding classical system:

$$m\dot{x} = k, \tag{6.8}$$

$$\dot{k} = -m\omega_0^2 x + \sum_\ell m_\ell\omega_\ell^2(x_\ell - x) + f_X(t), \tag{6.9}$$

$$m_\ell\dot{x}_\ell = k_\ell, \tag{6.10}$$

$$\dot{k}_\ell = -m_\ell\omega_\ell^2(x_\ell - x). \tag{6.11}$$

From (6.10) and (6.11), the equations of motion for the heat-bath oscillators take the form

$$\ddot{x}_\ell + \omega_\ell^2 x_\ell = \omega_\ell^2 x, \tag{6.12}$$

which indicates that each heat-bath oscillator is driven by a time-dependent force $\omega_\ell^2 x(t)$. The formal solution to the above equation is

$$\begin{aligned} x_\ell(t) &= x_\ell(0)\cos(\omega_\ell t) + k_\ell(0)\frac{\sin(\omega_\ell t)}{m_\ell\omega_\ell} + \omega_\ell\int_0^t d\tau\, x(\tau)\sin(\omega_\ell(t-\tau)) \\ &= x_\ell(0)\cos(\omega_\ell t) + k_\ell(0)\frac{\sin(\omega_\ell t)}{m_\ell\omega_\ell} \\ &+ x(t) - x(0)\cos(\omega_\ell t) - \int_0^t d\tau\,\dot{x}(\tau)\cos(\omega_\ell(t-\tau)). \end{aligned} \tag{6.13}$$

Combining (6.8), (6.9), and (6.13), we get the classical equation of motion for the position of the Brownian particle:

$$m\ddot{x}(t) + m\omega_0^2 x(t) + \int_0^t d\tau\,\dot{x}(\tau)\left[\sum_\ell m_\ell\omega_\ell^2\cos(\omega_\ell(t-\tau))\right] \tag{6.14}$$

$$= -x(0)\sum_\ell m_\ell\omega_\ell^2\cos(\omega_\ell t) + \sum_\ell m_\ell\omega_\ell^2\left[x_\ell(0)\cos(\omega_\ell t) + k_\ell(0)\frac{\sin(\omega_\ell t)}{m_\ell\omega_\ell}\right] + f_X(t),$$

or equivalently,

$$m\ddot{x}(t) + \int_0^t d\tau\, \eta(t-\tau)\dot{x}(\tau) + m\omega_0^2 x(t) = -x(0)\eta(t) + f(t) + f_X(t), \tag{6.15}$$

where

$$\eta(t) \equiv \sum_\ell m_\ell \omega_\ell^2 \cos(\omega_\ell t) \tag{6.16}$$

serves as the memory kernel, and

$$f(t) \equiv \sum_\ell \Big[x_\ell(0) m_\ell \omega_\ell^2 \cos(\omega_\ell t) + k_\ell(0)\omega_\ell \sin(\omega_\ell t)\Big] \tag{6.17}$$

is a time-dependent force acting on the Brownian particle. From the Weyl correspondence rule, the quantum analogue of (6.15) is

$$m\ddot{\hat{q}}(t) + \int_0^t d\tau\, \eta(t-\tau)\dot{\hat{q}}(\tau) + m\omega_0^2 \hat{q}(t) = -\hat{q}(0)\eta(t) + \hat{f}(t) + f_X(t), \tag{6.18}$$

where

$$\hat{f}(t) \equiv \sum_\ell \Big[\hat{q}_\ell(0) m_\ell \omega_\ell^2 \cos(\omega_\ell t) + \hat{p}_\ell(0)\omega_\ell \sin(\omega_\ell t)\Big]. \tag{6.19}$$

Eq. (6.18) can also be obtained from (6.6) using the Heisenberg equation of motion [22, 28, 30].

6.3 Solutions of the Classical Equations of Motion

In this section, we shall apply the Laplace transform method to solve the classical equation of motion (6.15) in terms of $f_X(t)$ and the initial values $x_j(0)$ and $k_j(0)$. Firstly we make a Laplace transform on (6.15):

$$\mathcal{L}_s\{x(t)\} = \frac{m\dot{x}(0) + mx(0)s + \bar{f}[s] + \bar{f}_X[s]}{Z(s)}, \tag{6.20}$$

where the variable s is complex with $\mathrm{Re}(s) > 0$,

$$\bar{f}[s] = \sum_\ell \frac{\omega_\ell^2[m_\ell x_\ell(0)s + k_\ell(0)]}{s^2 + \omega_\ell^2}, \tag{6.21}$$

$$\bar{f}_X[s] = \mathcal{L}_s\{f_X(t)\}, \tag{6.22}$$

and

$$Z(s) \equiv m(s^2 + \omega_0^2) + s\bar{\eta}[s], \tag{6.23}$$

with

$$\bar{\eta}[s] = \sum_{\ell} \frac{m_\ell \omega_\ell^2 s}{s^2 + \omega_\ell^2}. \tag{6.24}$$

Note that $Z(s)$ is an even function of s, and

$$Z(r) > 0, \forall r \in \mathbf{R}, \tag{6.25}$$

with

$$Z(0) = m\omega_0^2, \text{ and } \lim_{r\to\infty} \frac{Z(r)}{r^2} = m. \tag{6.26}$$

Since (6.7) is an N-mode Hamiltonian with its homogeneous part positive definite, there are exactly N real normal mode frequencies corresponding to those N normal modes of the corresponding classical system, which will henceforth be denoted by $\Omega_j > 0$. From the Laplace transform of $x(t)$ in (6.20), we know that if Ω_j is a normal mode frequency of (6.7), then both $\pm i\Omega_j$ are zeroes of $Z(s)$, i.e.,

$$Z(\pm i\Omega) = -m(\Omega^2 - \omega_0^2) + \sum_{\ell} \frac{m_\ell \omega_\ell^2 \Omega^2}{\Omega^2 - \omega_\ell^2} = 0 \tag{6.27}$$

is the equation for those normal mode frequencies. Using the graphical method (referring to Fig. 2, where $N = 1 + 3$), we see that as long as the ω_ℓ's are all different from each other, those N normal mode frequencies Ω_j's are also mutually different. The claim that all Ω_j's are real is also confirmed since $\Omega_j^2 > 0$. Moreover, we find that

$$0 < \Omega_0 < \omega_1 < \Omega_1 < \omega_2 < \Omega_2 < \cdots\cdots < \Omega_{n-1} < \omega_n < \Omega_n < \infty. \tag{6.28}$$

Because (6.27) is of the form

$$\frac{N\text{–degree polynomial in } \Omega^2}{\prod_{\ell}(\Omega^2 - \omega_\ell^2)} = 0, \tag{6.29}$$

it is guaranteed that (6.27) has no other roots in addition to $\pm i\Omega_j$. Therefore we conclude that $Z(s)^{-1}$ contains exactly $2N$ simple poles which lie on the imaginary axis of the complex s-plane and are symmetric about the origin. It is worthwhile to emphasize

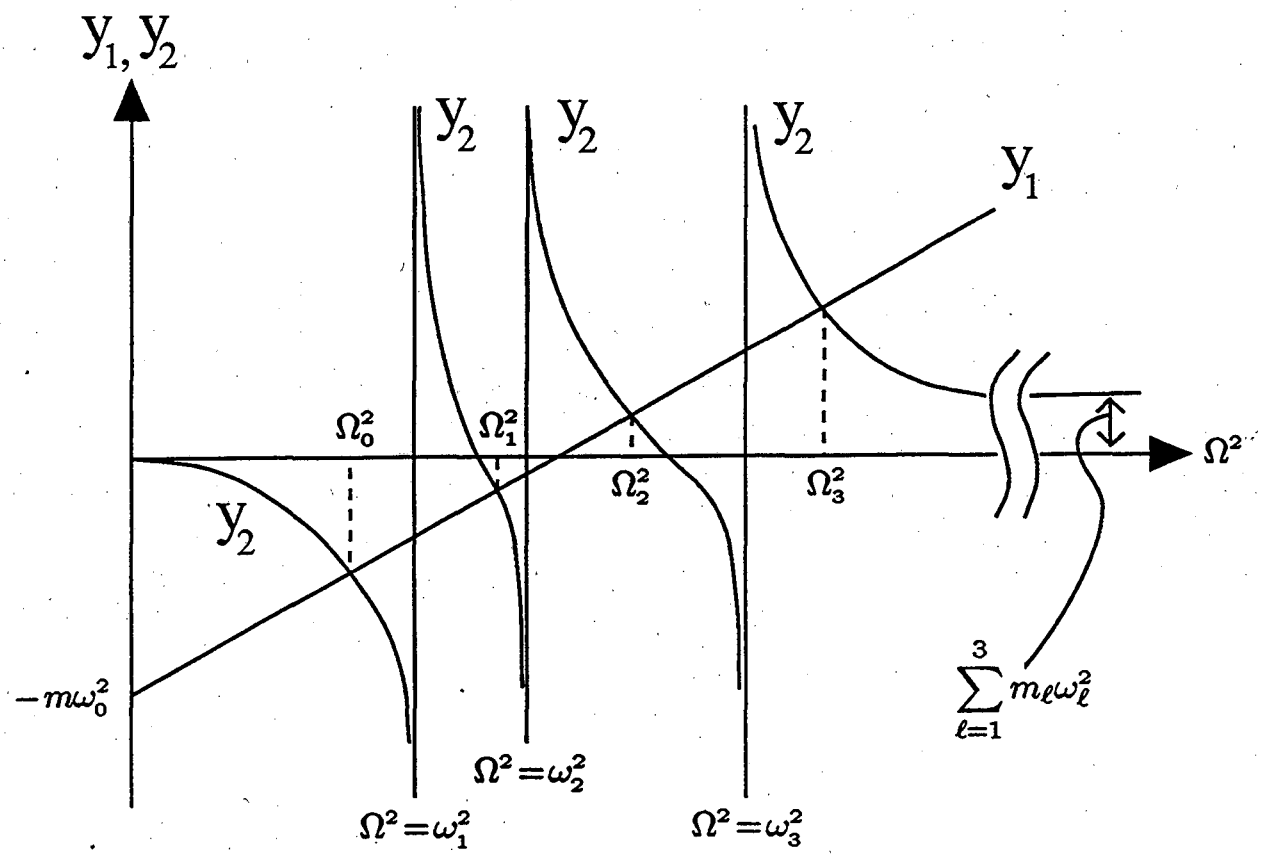

Figure 6.2: Graphical method for determining the roots of Eq. (6.27) with $N = 1 + 3$, which is equivalent to $y_1 = y_2$, where

$$y_1 = m(\Omega^2 - \omega_0^2), \quad \text{and} \quad y_2 = \sum_{\ell=1}^{3} \frac{m_\ell \omega_\ell^2 \Omega^2}{\Omega^2 - \omega_\ell^2}.$$

again that $Z(s)^{-1}$ is analytic on the s-plane except for these $2N$ simple poles lying on the imaginary axis.

We then define the fundamental solution $u(t)$ of (6.15) as

$$u(t) = \mathcal{L}^{-1}\left\{\frac{1}{Z(s)}\right\} = \frac{1}{2\pi i}\int_{\xi-i\infty}^{\xi+i\infty} ds\,\frac{\exp(st)}{Z(s)}\,, \tag{6.30}$$

where ξ is an arbitrary positive real number since $Z(s)^{-1}$ is analytic for $\mathrm{Re}(s)>0$. Since this fundamental solution $u(t)$ is defined in terms of the inverse Laplace transform, it vanishes for $t<0$. From (6.15) and (6.20), we can determine the initial conditions of the fundamental solution $u(t)$ as

$$u(0) = 0, \qquad \dot{u}(0) = \frac{1}{m}, \qquad \ddot{u}(0) = 0. \tag{6.31}$$

Using this fundamental solution $u(t)$, the time evolution of $x(t)$ can be expressed as

$$\begin{aligned} x(t) &= m\dot{x}(0)u(t) + mx(0)\dot{u}(t) + \int_0^t d\tau\, u(\tau)\Big[f(t-\tau) + f_X(t-\tau)\Big] \\ &= m\dot{u}(t)x(0) + u(t)k(0) + \sum_\ell \Big[m_\ell \dot{u}_\ell(t)x_\ell(0) + u_\ell(t)k_\ell(0)\Big] \\ &\quad + \int_0^t d\tau\, u(\tau) f_X(t-\tau), \end{aligned} \tag{6.32}$$

where

$$u_\ell(t) \equiv \omega_\ell \int_0^t d\tau\, u(\tau)\sin(\omega_\ell(t-\tau)), \tag{6.33}$$

and

$$\begin{aligned} \dot{u}_\ell(t) &= \omega_\ell^2 \int_0^t d\tau\, u(\tau)\cos(\omega_\ell(t-\tau)) \\ &= \omega_\ell \int_0^t d\tau\, \dot{u}(\tau)\sin(\omega_\ell(t-\tau)). \end{aligned} \tag{6.34}$$

The time evolution of $k(t)$ can be obtained from (6.32) straightforwardly:

$$\begin{aligned} k(t) &= m^2\ddot{u}(t)x(0) + m\dot{u}(t)k(0) + m\sum_\ell \Big[m_\ell \ddot{u}_\ell(t)x_\ell(0) + \dot{u}_\ell(t)k_\ell(0)\Big] \\ &\quad + m\int_0^t d\tau\, \dot{u}(\tau) f_X(t-\tau), \end{aligned} \tag{6.35}$$

where

$$\ddot{u}_\ell(t) = \omega_\ell^2 \int_0^t d\tau\, \dot{u}(\tau)\cos(\omega_\ell(t-\tau)) \tag{6.36}$$

according to (6.34).

In principle, we can substitute (6.32) into (6.13) to calculate the explicit solutions of $x_\ell(t)$ and then $k_\ell(t)$ in terms of $u(t)$, $f_X(t)$, and the initial values $x_j(0)$ and $k_j(0)$. However, it will be clear later that it is not necessary to obtain the explicit solution of $x_\ell(t)$ or $k_\ell(t)$ for determining the dynamics of the Brownian particle.

6.4 Linear Responses and the Generalized Susceptibility

According to the Weyl correspondence rule, the solution of the operator equation of motion (6.18) is formally isomorphic to (6.32):

$$\hat{q}(t) = m\dot{u}(t)\hat{q}(0) + u(t)\hat{p}(0) + \int_0^t d\tau\, u(\tau)\Big[\hat{f}(t-\tau) + f_X(t-\tau)\Big] \tag{6.37}$$

$$= m\dot{u}(t)\hat{q}(0) + u(t)\hat{p}(0) + \sum_\ell \Big[m_\ell \dot{u}_\ell(t)\hat{q}_\ell(0) + u_\ell(t)\hat{p}_\ell(0)\Big] \tag{6.38}$$

$$+ \int_0^t d\tau\, u(\tau) f_X(t-\tau),$$

and the time evolution of the momentum operator $\hat{p}(t)$ is

$$\hat{p}(t) = m^2\ddot{u}(t)\hat{q}(0) + m\dot{u}(t)\hat{p}(0) + m\int_0^t d\tau\, \dot{u}(\tau)\Big[\hat{f}(t-\tau) + f_X(t-\tau)\Big] \tag{6.39}$$

$$= m^2\ddot{u}(t)\hat{q}(0) + m\dot{u}(t)\hat{p}(0) + m\sum_\ell \Big[m_\ell \ddot{u}_\ell(t)\hat{q}_\ell(0) + \dot{u}_\ell(t)\hat{p}_\ell(0)\Big] \tag{6.40}$$

$$+ m\int_0^t d\tau\, \dot{u}(\tau) f_X(t-\tau).$$

From the above two expressions, we can calculate the responses of the Brownian particle with respect to an applied force which corresponds to $f_X(t)$ in the model Hamiltonian (6.6). Taking the expectation value of (6.38) with respect to a given initial quantum state, we get

$$\langle\hat{q}(t)\rangle = m\dot{u}(t)\langle\hat{q}(0)\rangle + u(t)\langle\hat{p}(0)\rangle + \sum_\ell \Big[m_\ell \dot{u}_\ell(t)\langle\hat{q}_\ell(0)\rangle + u_\ell(t)\langle\hat{p}_\ell(0)\rangle\Big]$$

$$+ \int_0^t d\tau\, u(\tau) f_X(t-\tau). \tag{6.41}$$

If the mean vector of this initial state is zero, then the above expectation value reduces to

$$\langle\hat{q}(t)\rangle = \int_0^t d\tau\, u(\tau) f_X(t-\tau) = \int_0^\infty d\tau\, u(t-\tau) f_X(\tau), \tag{6.42}$$

where $u(t<0)=0$ has been used. As a comparison, the linear response of the momentum expectation value for the same initial state is

$$\langle \hat{p}(t) \rangle = m \int_0^\infty d\tau \, \dot{u}(t-\tau) f_X(\tau). \tag{6.43}$$

In (6.42), if we interpret $u(t<0)=0$ as the causality condition, then the fundamental solution $u(t)$ serves as the retarded Green's function for $\langle \hat{q}(t) \rangle$ with respect to the applied force $f_X(t)$. From linear response theory, we know that it is convenient to consider the retarded Green's function as a Fourier transform of the so-called generalized susceptibility $\alpha(\omega)$. The explicit expression for $\alpha(\omega)$ corresponding to $u(t)$ can be obtained by setting $\xi=\epsilon$ in (6.30):

$$\begin{aligned} u(t) &= \frac{1}{2\pi} \int_{-\infty}^{+\infty} d\omega \frac{\exp[(\epsilon+i\omega)t]}{Z(\epsilon+i\omega)} \\ &= \frac{1}{2\pi} \int_{-\infty}^{+\infty} d\omega \frac{\exp(-i\omega t)}{Z(\epsilon-i\omega)} \\ &\equiv \frac{1}{2\pi} \int_{-\infty}^{+\infty} d\omega \exp(-i\omega t) \alpha(\omega), \end{aligned} \tag{6.44}$$

i.e.,

$$\alpha(\omega) = \frac{1}{Z(\epsilon - i\omega)} = \frac{1}{Z(-\epsilon + i\omega)} \tag{6.45}$$

is the generalized susceptibility of the total system for the response $\langle \hat{q}(t) \rangle$ with respect to the applied force $f_X(t)$. Note that in (6.44) we have made a change of variable $\omega \to -\omega$ in order to follow our convention for the Fourier transform.

The reason that we took ξ in (6.30) to be the infinitesimal ϵ is because otherwise we will not be able to put the fundamental solution $u(t)$ in (6.30) as a Fourier transform of a function of ω, and accordingly it is impossible to determine the explicit form of the susceptibility $\alpha(\omega)$ in terms of $Z(s)$. The physical meaning of this limit is the manifestation of the resonant behavior of the total system, which is analogous to the resonant absorption in electrodynamics [50, 57], the continuous-spectrum transition in quantum perturbation theory [58], and Landau damping in collisionless plasmas [62], etc. This resonance is also the physical mechanism which allows us to construct a dissipative environment out of a conservative model Hamiltonian.

Conversely, we can take $\alpha(\omega)$ as the Laplace transform of the fundamental solution $u(t)$:

$$\alpha(\omega) = \int_0^\infty dt \exp[i(\omega + i\epsilon)t]u(t), \tag{6.46}$$

where $i\epsilon$ guarantees the convergence of the integral. This $i\epsilon$ can be omitted if and only if we take the thermodynamic limit, which will be discussed in Chap. 8.

Following the convention in linear response theory, we use the notations $\alpha'(\omega)$ and $\alpha''(\omega)$ to denote the real and imaginary parts of $\alpha(\omega)$, individually. From (6.45) or (6.46), it is obvious that $\alpha'(\omega)$ and $\alpha''(\omega)$ are even and odd functions of ω, respectively. Moreover, from (6.45) we find that

$$\alpha'(0) = \frac{1}{Z(0)} = \frac{1}{m\omega_0^2}, \qquad \alpha''(0) = 0, \tag{6.47}$$

and

$$\lim_{\omega \to 0} \alpha''(\omega) = O(\omega). \tag{6.48}$$

In linear response theory, it is more convenient to take the generalized susceptibility as a function of the complex frequency. Hence we shall now extend the frequency ω into a complex variable $\varpi \equiv \omega + i\omega''$. It is necessary to emphasize that, although the original real ω is the imaginary part of the complex variable s, *the complex ϖ-plane does not overlap with the complex s-plane!* According to (6.46), $\alpha(\varpi)$ is analytic for $\omega'' \geq 0$ on the complex ϖ-plane, which is a generic property of the generalized susceptibility as a consequence of the causality principle.

Since $\alpha(\varpi)$ is analytic for $\omega'' \geq 0$, $\alpha'(\omega)$ and $\alpha''(\omega)$ are related via the dispersion relation:

$$\alpha'(\omega) = \frac{1}{\pi} \Pr \int_{-\infty}^{+\infty} d\nu \frac{\alpha''(\nu)}{\nu - \omega}. \tag{6.49}$$

Using the well-known formula in complex analysis:

$$\int_{-\infty}^{+\infty} d\nu \frac{f(\nu)}{\nu - \omega - i\epsilon} = \Pr \int_{-\infty}^{+\infty} d\nu \frac{f(\nu)}{\nu - \omega} + i\pi f(\omega), \tag{6.50}$$

or the symbolical expression

$$\frac{1}{\nu - i\epsilon} = \Pr\left(\frac{1}{\nu}\right) + i\pi\delta(\nu), \tag{6.51}$$

we have

$$\alpha(\omega) = \frac{1}{\pi} \int_{-\infty}^{+\infty} d\nu \frac{\alpha''(\nu)}{\nu - \omega - i\epsilon}. \tag{6.52}$$

It then follows that the fundamental solution $u(t)$ in (6.44) can be expressed as

$$\begin{aligned} u(t) &= \frac{i}{\pi} \int_{-\infty}^{+\infty} d\omega \exp(-i\omega t)\alpha''(\omega) \\ &= \frac{1}{\pi} \int_{-\infty}^{+\infty} d\omega \sin(\omega t)\alpha''(\omega). \end{aligned} \tag{6.53}$$

Note that when $t < 0$, the right hand side of (6.53) is equal to $-u(-t) \neq 0$. This is because $\alpha''(\omega)$, unlike $\alpha(\omega)$, is not analytic for $\omega'' \geq 0$. For $t \in \mathbf{R}$, we define another fundamental solution $w(t)$ as

$$\begin{aligned} w(t) &= u(t) - u(-t) \\ &= \frac{i}{\pi} \int_{-\infty}^{+\infty} d\omega \exp(-i\omega t)\alpha''(\omega) \\ &= \frac{1}{\pi} \int_{-\infty}^{+\infty} d\omega \sin(\omega t)\alpha''(\omega), \end{aligned} \tag{6.54}$$

which is an odd function of $t \in \mathbf{R}$.

Chapter 7

Thermal Equilibrium State

NOTE: Unless otherwise mentioned, $t \in \mathbf{R}$ and $0 < \beta < \infty$ throughout this chapter.

7.1 Diagonalization of the Model Hamiltonian

As a preparation, we consider the diagonalization of the model Hamiltonian (6.1) [8, 29, 95] in this section. First let us put (6.1) into the matrix form

$$\hat{H} = \frac{1}{2}(\hat{q}, \hat{p}) \begin{pmatrix} \mathsf{V} & \mathbf{0} \\ \mathbf{0} & \mathsf{U} \end{pmatrix} (\hat{q}', \hat{p})^{\mathsf{T}} \equiv \tfrac{1}{2}\hat{r}\mathsf{K}\hat{r}^{\mathsf{T}}, \tag{7.1}$$

where U and V are two $N \times N$ symmetric and positive definite matrices defined as

$$\mathsf{U} = \operatorname{diag}\left\{\frac{1}{m}, \frac{1}{m_1}, \frac{1}{m_2}, \cdots, \frac{1}{m_n}\right\}, \tag{7.2}$$

$$\mathsf{V} = \begin{pmatrix} \sum_j m_j\omega_j^2 & -m_1\omega_1^2 & -m_2\omega_2^2 & \cdots & -m_n\omega_n^2 \\ -m_1\omega_1^2 & m_1\omega_1^2 & 0 & \cdots & 0 \\ -m_2\omega_2^2 & 0 & m_2\omega_2^2 & \cdots & 0 \\ \vdots & \vdots & \vdots & \ddots & \vdots \\ -m_n\omega_n^2 & 0 & 0 & \cdots & m_n\omega_n^2 \end{pmatrix}. \tag{7.3}$$

According to Theorem 1.2.3, the matrix K can be diagonalized by a congruence symplectic transformation:

$$\mathsf{K} = \begin{pmatrix} \mathsf{V} & \mathbf{0} \\ \mathbf{0} & \mathsf{U} \end{pmatrix} = \mathsf{S}^{\mathsf{T}} \begin{pmatrix} \mathbf{\Omega} & \mathbf{0} \\ \mathbf{0} & \mathbf{\Omega} \end{pmatrix} \mathsf{S}, \tag{7.4}$$

where S is a $2N \times 2N$ symplectic matrix, and the diagonal $N \times N$ matrix $\boldsymbol{\Omega}$ has the normal mode frequencies Ω_j's as its diagonal elements. The explicit form of S can be calculated via an orthogonal transformation as follows:

$$\mathsf{S} = \begin{pmatrix} \boldsymbol{\Omega}^{\frac{1}{2}} & 0 \\ 0 & \boldsymbol{\Omega}^{-\frac{1}{2}} \end{pmatrix} \begin{pmatrix} \mathsf{X} & 0 \\ 0 & \mathsf{X} \end{pmatrix} \begin{pmatrix} \mathsf{U}^{-\frac{1}{2}} & 0 \\ 0 & \mathsf{U}^{\frac{1}{2}} \end{pmatrix} = \begin{pmatrix} \boldsymbol{\Omega}^{\frac{1}{2}}\mathsf{X}\mathsf{U}^{-\frac{1}{2}} & 0 \\ 0 & \boldsymbol{\Omega}^{-\frac{1}{2}}\mathsf{X}\mathsf{U}^{\frac{1}{2}} \end{pmatrix}, \tag{7.5}$$

with

$$\mathsf{U}^{\frac{1}{2}}\mathsf{V}\mathsf{U}^{\frac{1}{2}} = \mathsf{X}^{\mathsf{T}}\boldsymbol{\Omega}^2\mathsf{X}, \quad \text{and} \quad \mathsf{X}^{\mathsf{T}}\mathsf{X} = \mathsf{X}\mathsf{X}^{\mathsf{T}} = \mathsf{I}_N, \tag{7.6}$$

i.e., the square of each normal mode frequency Ω_j is an eigenvalue of the symmetric matrix $\mathsf{U}^{\frac{1}{2}}\mathsf{V}\mathsf{U}^{\frac{1}{2}}$. Since we will only use (7.4) formally in the following, it is not necessary to calculate the explicit form of the matrix X or S.

7.2 Phase Flow of the Classical System

We shall now derive the phase flow (4.32) for the classical system corresponding to the quantum Hamiltonian (6.1) [8, 44, 45, 95] using the results obtained in the last section. First of all, we can make sure that $\boldsymbol{a}(t) = \mathbf{0}$ since the Hamiltonian (6.1) is homogeneous. Because this Hamiltonian is time-independent, the time-evolution operator defined by (4.26) is simply

$$\hat{\mathcal{U}}(t) = \exp\left\{-it\hat{H}\right\}, \tag{7.7}$$

which is an element of the group $\mathbf{Mp}(2N, \mathbf{R})$. According to the Weyl correspondence rule, $\mathsf{R}(t)$ in (4.32) can be calculated via the time evolution of $\hat{\boldsymbol{r}}$. Using the results in Sec. 1.2.2, we have

$$\hat{\boldsymbol{r}}^{\mathsf{T}}(t) = \hat{\mathcal{U}}^{\dagger}(t)\hat{\boldsymbol{r}}^{\mathsf{T}}\hat{\mathcal{U}}(t) = \mathsf{R}(t)\hat{\boldsymbol{r}}^{\mathsf{T}}, \tag{7.8}$$

where

$$\mathsf{R}(t) = \exp\{t\mathsf{J}\mathsf{K}\} = \mathsf{S}^{-1} \begin{pmatrix} \cos(\boldsymbol{\Omega}t) & \sin(\boldsymbol{\Omega}t) \\ -\sin(\boldsymbol{\Omega}t) & \cos(\boldsymbol{\Omega}t) \end{pmatrix} \mathsf{S}, \tag{7.9}$$

with

$$\cos(\boldsymbol{\Omega}t) \equiv \operatorname{diag}\left\{\cos(\Omega_0 t), \cos(\Omega_1 t), \cos(\Omega_2 t), \cdots, \cos(\Omega_n t)\right\}, \tag{7.10}$$

and $\sin(\mathbf{\Omega} t)$ defined in a similar way.

Comparing the definition of the phase flow in (4.32) with (6.32) and (6.35), the latter two equations give the explicit expressions for the elements in the 0-th and N-th rows of $\mathsf{R}(t>0)$, which will be the only elements we need for studying the dynamics of the Brownian particle. Hence it is not necessary to obtain the explicit form of $\mathsf{R}(t)$ in (7.9).

From the solutions (6.32) and (6.35), along with the explicit form of the phase flow (7.9), we find that the two-dimensional restricted phase flow on the Brownian phase plane takes the form

$$[\![\mathsf{R}(t)]\!] = \begin{pmatrix} m\dot{w}(t) & w(t) \\ & \\ m^2\ddot{w}(t) & m\dot{w}(t) \end{pmatrix}, \tag{7.11}$$

where $w(t)$ is defined by (6.54). For $t \geq 0$, Eq. (7.11) reduces to

$$[\![\mathsf{R}(t)]\!] = \begin{pmatrix} m\dot{u}(t) & u(t) \\ & \\ m^2\ddot{u}(t) & m\dot{u}(t) \end{pmatrix}. \tag{7.12}$$

7.3 Correlation Functions of the Brownian Particle

If the total system described by the Hamiltonian (6.1) is immersed in an ideal (i.e., non-dissipative) phenomenological heat bath of temperature β^{-1}, the state of the total system will finally approach the thermal state with the canonical density operator (3.33), which will hereafter be called the "model thermal state." After the total system reaches the model thermal state, i.e., reaches thermal equilibrium with the phenomenological heat bath, the total system can be isolated and the phenomenological heat bath can be removed. Conceptually, in order to define the model thermal state of the total system, the introduction of this phenomenological heat bath is necessary.

The correlation matrix $\mathsf{C}_\beta(t_1, t_2)$ of the total system with respect to the model thermal state is defined as

$$\begin{aligned} \mathsf{C}_\beta(t_1, t_2) &= \left\langle \hat{r}^\mathsf{T}(t_1)\hat{r}(t_2) \right\rangle_\beta \\ &= \mathsf{R}(t_1)\left\langle \hat{r}^\mathsf{T}(0)\hat{r}(0) \right\rangle_\beta \mathsf{R}^\mathsf{T}(t_2), \end{aligned} \tag{7.13}$$

where $\langle\ \rangle_\beta$ denotes the expectation value with respect to the model thermal state, the same notation will be used throughout the remainder of this paper. Since the model Hamiltonian (6.1) is homogeneous, the mean vector of the model thermal state is zero. Therefore it is not necessary to include the mean vector in the above definition of the correlation matrix.

Since the Hamiltonian $\hat{H}$ in (6.1) is time-independent, the model thermal state is a steady state. Hence we have

$$\left\langle \hat{\boldsymbol{r}}^{\mathsf{T}}(t)\hat{\boldsymbol{r}}(t)\right\rangle_\beta = \left\langle \hat{\boldsymbol{r}}^{\mathsf{T}}(0)\hat{\boldsymbol{r}}(0)\right\rangle_\beta \equiv \boldsymbol{\Sigma}_\beta + \tfrac{i}{2}\mathsf{J} \tag{7.14}$$

according to (3.22), where $\boldsymbol{\Sigma}_\beta$ denotes the covariance matrix of the model thermal state which satisfies

$$\mathsf{R}(t)\boldsymbol{\Sigma}_\beta\mathsf{R}^{\mathsf{T}}(t) = \boldsymbol{\Sigma}_\beta. \tag{7.15}$$

Since S in (7.5) is block-diagonal, $\boldsymbol{\Sigma}_\beta$ is also block-diagonal according to (3.46).

From (7.14) we can infer that the operator $\hat{\boldsymbol{r}}(t)$ is a multivariate (quantum) stationary process with respect to the model thermal state since the latter is a Gaussian state. The explicit expression of the correlation matrix $\mathsf{C}_\beta(t_1,t_2)$ is

$$\mathsf{C}_\beta(t_1,t_2) = \mathsf{R}(t_1-t_2)\left(\boldsymbol{\Sigma}_\beta + \tfrac{i}{2}\mathsf{J}\right), \tag{7.16}$$

hence we can merely study

$$\mathsf{C}_\beta(t,0) \equiv \mathsf{C}_\beta(t) = \mathsf{S}_\beta(t) + \tfrac{i}{2}\mathsf{R}(t)\mathsf{J}, \tag{7.17}$$

where $\mathsf{S}_\beta(t) \equiv \mathsf{R}(t)\boldsymbol{\Sigma}_\beta$. Note that $\mathsf{C}_\beta(t) \neq \mathsf{C}_\beta(-t)$.

Among all the elements in $\mathsf{C}_\beta(t)$, those four in $[\![\mathsf{C}_\beta(t)]\!]$ are those corresponding to the Brownian particle:

$$\begin{aligned}[\![\mathsf{C}_\beta(t)]\!] &= [\![\mathsf{S}_\beta(t)]\!] + \tfrac{i}{2}[\![\mathsf{R}(t)]\!]\mathsf{j} \\ &= \begin{pmatrix} \langle\hat{q}(t)\hat{q}(0)\rangle_\beta & \langle\hat{q}(t)\hat{p}(0)\rangle_\beta \\ \langle\hat{p}(t)\hat{q}(0)\rangle_\beta & \langle\hat{p}(t)\hat{p}(0)\rangle_\beta \end{pmatrix}.\end{aligned} \tag{7.18}$$

Comparing $\mathsf{C}_\beta(t)$ with $\mathsf{C}_\beta(-t)$, we find that the two diagonal elements in $[\![\mathsf{S}_\beta(t)]\!]$ are the symmetrized auto-correlation functions for the position and momentum of the Brownian

particle:

$$\llbracket \mathsf{S}_\beta(t) \rrbracket_{11} = \tfrac{1}{2}\Big\langle \hat{q}(t)\hat{q}(0) + \hat{q}(0)\hat{q}(t) \Big\rangle_\beta, \tag{7.19}$$

$$\llbracket \mathsf{S}_\beta(t) \rrbracket_{22} = \tfrac{1}{2}\Big\langle \hat{p}(t)\hat{p}(0) + \hat{p}(0)\hat{p}(t) \Big\rangle_\beta, \tag{7.20}$$

which are both even functions of t.

Using the Heisenberg picture, it is easy to derive the following relations:

$$m\frac{d}{dt}\llbracket \mathsf{C}_\beta(t) \rrbracket_{11} = -\llbracket \mathsf{C}_\beta(t) \rrbracket_{12} = \llbracket \mathsf{C}_\beta(t) \rrbracket_{21}, \tag{7.21}$$

and

$$\llbracket \mathsf{C}_\beta(t) \rrbracket_{22} = -m^2\frac{d^2}{dt^2}\llbracket \mathsf{C}_\beta(t) \rrbracket_{11}, \tag{7.22}$$

where

$$\Big\langle \hat{q}(t)\hat{q}(0) \Big\rangle_\beta = \Big\langle \hat{q}(0)\hat{q}(-t) \Big\rangle_\beta, \tag{7.23}$$

and

$$\Big\langle \hat{q}(t)\hat{p}(0) \Big\rangle_\beta = \Big\langle \hat{q}(0)\hat{p}(-t) \Big\rangle_\beta \tag{7.24}$$

have been used in deriving (7.21).

Applying (7.21) and (7.22) to (7.18), we get similar relations among the elements in $\llbracket \mathsf{S}_\beta(t) \rrbracket$:

$$m\frac{d}{dt}\llbracket \mathsf{S}_\beta(t) \rrbracket_{11} = -\llbracket \mathsf{S}_\beta(t) \rrbracket_{12} = \llbracket \mathsf{S}_\beta(t) \rrbracket_{21}, \tag{7.25}$$

$$\llbracket \mathsf{S}_\beta(t) \rrbracket_{22} = -m^2\frac{d^2}{dt^2}\llbracket \mathsf{S}_\beta(t) \rrbracket_{11}. \tag{7.26}$$

Hence $\llbracket \mathsf{S}_\beta(t) \rrbracket$ can be expressed as

$$\llbracket \mathsf{S}_\beta(t) \rrbracket = \begin{pmatrix} v(t;\beta) & -m\dot{v}(t;\beta) \\ \\ m\dot{v}(t;\beta) & -m^2\ddot{v}(t;\beta) \end{pmatrix}, \tag{7.27}$$

where $v(t;\beta) \equiv \langle \hat{q}(t)\hat{q}(0) \rangle_\beta$ is the counterpart of the fundamental solution $u(t)$ for studying quantum harmonic Brownian motion. The explicit expressions of the elements in $\llbracket \mathsf{S}_\beta(t) \rrbracket$ will be calculated in the next section.

7.4 Fluctuation-Dissipation Theorem

In this section, we shall derive the fluctuation-dissipation theorem (or fluctuation-dissipation relation) [14, 56, 57, 59, 91] for our model, and then apply this theorem to obtain the correlation functions of the Brownian particle with respect to the model thermal state [51, 76]. The advantage of using this theorem is that, instead of diagonalizing the Hamiltonian explicitly, we can use the fundamental solution $u(t)$ to obtain these correlation functions. This is one of many examples of using the analogy between the canonical density operator and the time-evolution operator in connecting quantum statistical mechanics with quantum dynamics.

Firstly, we shall apply the results from Chap. 6 to prove the fluctuation-dissipation theorem for our model. Using $\hat{\mathcal{U}}(t)$ in (7.7), the time evolution of $\hat{q}(t)$ in the Heisenberg picture can be expressed as

$$\begin{aligned}\hat{q}(t) &= \hat{\mathcal{U}}^{\dagger}(t)\,\hat{q}(0)\hat{\mathcal{U}}(t)\\ &= \hat{\mathcal{U}}(-t)\,\hat{q}(0)\hat{\mathcal{U}}(t).\end{aligned} \tag{7.28}$$

Since up to a proportionality constant, the canonical density operator can be taken as the time-evolution operator with imaginary time, i.e.,

$$\hat{\varrho}_{\beta} = \frac{\hat{\mathcal{U}}(-i\beta)}{Tr\Big[\hat{\mathcal{U}}(-i\beta)\Big]}, \tag{7.29}$$

we have

$$\begin{aligned}\Big\langle \hat{q}(0)\hat{q}(t)\Big\rangle_{\beta} &= \frac{Tr\Big[\hat{\mathcal{U}}(-i\beta)\hat{q}(0)\hat{q}(t)\Big]}{Tr\Big[\hat{\mathcal{U}}(-i\beta)\Big]}\\ &= \frac{Tr\Big[\hat{\mathcal{U}}(-i\beta)\hat{q}(t-i\beta)\hat{q}(0)\Big]}{Tr\Big[\hat{\mathcal{U}}(-i\beta)\Big]}\\ &= \Big\langle \hat{q}(t-i\beta)\hat{q}(0)\Big\rangle_{\beta}\\ &= \exp\Big\{-i\beta\partial_t\Big\}\Big\langle \hat{q}(t)\hat{q}(0)\Big\rangle_{\beta}.\end{aligned} \tag{7.30}$$

On the other hand, from the canonical commutation relations (1.1) and the time evolution of $\hat{q}(t)$ in (6.38), it is easy to get the following operator identity:

$$[\hat{q}(t), \hat{q}(0)] = -iu(t)\hat{1}, \quad t \geq 0. \tag{7.31}$$

Accordingly, for $t \in \mathbf{R}$:

$$[\hat{q}(t), \hat{q}(0)] = -iw(t)\hat{\mathbf{1}}. \tag{7.32}$$

Taking the expectation value of (7.32) with respect to the model thermal state and using (7.30), we get

$$\Big\langle [\hat{q}(t), \hat{q}(0)] \Big\rangle_\beta = \Big[1 - \exp\{-i\beta\partial_t\}\Big] \Big\langle \hat{q}(t)\hat{q}(0) \Big\rangle_\beta = -iw(t). \tag{7.33}$$

The fluctuation-dissipation theorem can be easily obtained from (6.54) and (7.33):

$$\begin{aligned}
v(t;\beta) &= \tfrac{1}{2}\Big\langle \hat{q}(t)\hat{q}(0) + \hat{q}(0)\hat{q}(t) \Big\rangle_\beta \\
&= \tfrac{1}{2}\Big[1 + \exp\{-i\beta\partial_t\}\Big] \Big\langle \hat{q}(t)\hat{q}(0) \Big\rangle_\beta \\
&= \frac{1}{2\pi}\left[\frac{1 + \exp\{-i\beta\partial_t\}}{1 - \exp\{-i\beta\partial_t\}}\right] \int_{-\infty}^{+\infty} d\omega \, \exp(-i\omega t)\, \alpha''(\omega) \\
&= \frac{1}{2\pi} \int_{-\infty}^{+\infty} d\omega \, \exp(-i\omega t)\, \alpha''(\omega) \left[\frac{1 + \exp(-\beta\omega)}{1 - \exp(-\beta\omega)}\right] \\
&= \frac{1}{2\pi} \int_{-\infty}^{+\infty} d\omega \, \exp(-i\omega t)\, \alpha''(\omega) \coth(\beta\omega/2) \\
&= \frac{1}{2\pi} \int_{-\infty}^{+\infty} d\omega \, \cos(\omega t)\, \alpha''(\omega) \coth(\beta\omega/2).
\end{aligned} \tag{7.34}$$

Note that the integrand of the above integration is finite at $\omega = 0$ according to (6.48) and

$$\coth(\beta\epsilon/2) = \frac{2}{\beta\epsilon} + O(\epsilon). \tag{7.35}$$

It is worthwhile to mention that in the proof of the fluctuation-dissipation theorem for a general system [56, 57, 59], the generalized susceptibility $\alpha(\omega)$, hence $\alpha''(\omega)$, has to be defined from the retarded Green's function with respect to a perturbing force which corresponds to $f_X(t)$ in (6.6). However, since our model is linear hence exactly solvable, $\alpha''(\omega)$ can be defined directly from the fundamental solution $u(t)$, and we do not even have to introduce the perturbing force $f_X(t)$ in stating the fluctuation-dissipation theorem for our model [91]. (Although $u(t)$ is indeed the retarded Green's function

with respect to $f_X(t)$, and we can still interpret our $\alpha''(\omega)$ in the traditional way. But note that $f_X(t)$ does not have to be a small perturbation in this case.) Therefore the fluctuation-dissipation theorem is exact for our model, and it can be proved that the above argument is valid for any quantum linear system.

Substituting (7.34) into (7.25) and (7.26), we get

$$[\![\mathsf{S}_\beta(t)]\!]_{12} = -[\![\mathsf{S}_\beta(t)]\!]_{21} = \frac{m}{2\pi}\int_{-\infty}^{+\infty} d\omega\, \sin(\omega t)\omega\alpha''(\omega)\coth(\beta\omega/2), \tag{7.36}$$

and

$$\begin{aligned}[\![\mathsf{S}_\beta(t)]\!]_{22} &= \frac{m^2}{2\pi}\int_{-\infty}^{+\infty} d\omega\, \exp(-i\omega t)\omega^2\alpha''(\omega)\coth(\beta\omega/2) \\ &= \frac{m^2}{2\pi}\int_{-\infty}^{+\infty} d\omega\, \cos(\omega t)\omega^2\alpha''(\omega)\coth(\beta\omega/2). \end{aligned} \tag{7.37}$$

Similar to (7.34), the integrands of the above two integrations are also finite at $\omega=0$.

Substituting (7.34), (7.36), and (7.37) into (7.18), we then get the explicit expressions for the four correlation functions of the Brownian particle. As a comparison, we list two anti-symmetrized auto-correlation functions as follows:

$$\tfrac{1}{2}\left\langle \hat{q}(t)\hat{q}(0) - \hat{q}(0)\hat{q}(t)\right\rangle_\beta = -\tfrac{i}{2}w(t), \tag{7.38}$$

$$\tfrac{1}{2}\left\langle \hat{p}(t)\hat{p}(0) - \hat{p}(0)\hat{p}(t)\right\rangle_\beta = \tfrac{i}{2}m^2\ddot{w}(t), \tag{7.39}$$

which are both temperature-independent.

7.5 Thermal Equilibrium State of the Brownian Particle

If the total system described by (6.1) is isolated and is in the model thermal state, then the Brownian particle is in thermal equilibrium with the remainder of the system, i.e., the heat-bath oscillators. Therefore, it is legitimate to define the thermal equilibrium state of the Brownian particle in our model as the state corresponding to the 0-th mode reduced density operator of the canonical density operator. In the following, we shall derive the explicit form of this thermal equilibrium state of the Brownian particle.

Since the Hamiltonian (6.1) is homogeneously quadratic, the model thermal state is a Gaussian state with zero mean vector, thus it is completely determined by the covariance matrix $\mathbf{\Sigma}_\beta$ according to the discussion in Sec. 3.4. The characteristic function of the model thermal state takes the form

$$\Phi_\beta(\boldsymbol{z}) = \exp\left\{-\tfrac{1}{2}\boldsymbol{z}\mathsf{J}^\top\mathbf{\Sigma}_\beta\mathsf{J}\boldsymbol{z}^\top\right\}. \tag{7.40}$$

From the reduction theory studied in Chap. 5, the reduced state out of the model thermal state that corresponds to the Brownian particle is characterized by the reduced covariance matrix $[\![\mathbf{\Sigma}_\beta]\!]$, which is also a Gaussian state with zero mean vector. This reduced state is then defined as the thermal equilibrium state of the Brownian particle immersed in a quantum dissipative heat bath modeled by the independent-oscillator model. The corresponding one-mode characteristic function is

$$\Phi_{0,\beta}(x,k) \equiv \exp\left\{-\frac{1}{2}\big(x,k\big)\mathsf{j}^\top[\![\mathbf{\Sigma}_\beta]\!]\mathsf{j}\begin{pmatrix}x\\k\end{pmatrix}\right\}. \tag{7.41}$$

Since $\mathbf{\Sigma}_\beta$ is block-diagonal, $[\![\mathbf{\Sigma}_\beta]\!]$ is diagonal. Hence we can define

$$[\![\mathbf{\Sigma}_\beta]\!] = \begin{pmatrix}\sigma_{qq}[\beta] & 0\\ 0 & \sigma_{pp}[\beta]\end{pmatrix}, \tag{7.42}$$

where $[\beta]$ indicates that these two variances are with respect to the thermal equilibrium state with the temperature β^{-1}, and $\sigma_{qq}[\beta]$ and $\sigma_{pp}[\beta]$ can be taken as the the initial values of (7.34) and (7.37), respectively, as follows:

$$\sigma_{qq}[\beta] = v(0;\beta) = \frac{1}{2\pi}\int_{-\infty}^{+\infty} d\omega\,\alpha''(\omega)\coth(\beta\omega/2), \tag{7.43}$$

$$\sigma_{pp}[\beta] = -m^2\ddot{v}(0;\beta) = \frac{m^2}{2\pi}\int_{-\infty}^{+\infty} d\omega\,\omega^2\alpha''(\omega)\coth(\beta\omega/2). \tag{7.44}$$

Both (7.43) and (7.44) can be transformed into series expansions by using the Parseval–Plancherel theorem in Fourier analysis:

$$\int_{-\infty}^{+\infty} d\tau\, f(\tau)g^*(\tau) = \frac{1}{2\pi}\int_{-\infty}^{+\infty} d\omega\, F(\omega)G^*(\omega), \tag{7.45}$$

where $(f(t), F(\omega))$ and $(g(t), G(\omega))$ are two Fourier transform pairs according to the definitions in Sec. 1.1.

In order to apply the Parseval–Plancherel theorem to (7.43) and (7.44), first we have to replace $\coth(\beta\omega/2)$ by its principal value $\mathrm{Pr}\coth(\beta\omega/2)$ in (7.43) and (7.44) since the former has no Fourier transform but the latter does. This replacement will not change the results of the integrations since, as we just mentioned, the integrands of (7.43) and (7.44) are both finite at $\omega=0$.

Since the Fourier transform of $\mathrm{Pr}\coth(\beta\omega/2)$ is $[-i\,\mathrm{Pr}\coth(\pi t/\beta)/\beta]$ and that of $\alpha''(\omega)$ is given by (6.54), according to the Parseval–Plancherel theorem we can transform (7.43) into

$$\begin{aligned}
\sigma_{qq}[\beta] &= \int_{-\infty}^{+\infty} d\tau \left[\frac{w(\tau)}{2i}\right]\left[\frac{-i}{\beta}\,\mathrm{Pr}\coth(\pi\tau/\beta)\right]^* \\
&= \frac{1}{2\beta}\int_{-\infty}^{+\infty} d\tau\, w(\tau)\coth(\pi\tau/\beta) \\
&= \frac{1}{\beta}\int_0^{\infty} d\tau\, u(\tau)\coth(\pi\tau/\beta) \\
&= \frac{1}{\beta}\int_0^{\infty} d\tau\, u(\tau)\left[1+2\sum_{\mu=1}^{\infty}\exp(-2\mu\pi\tau/\beta)\right] \\
&= \frac{1}{\beta}\left[Z^{-1}(0)+2\sum_{\mu=1}^{+\infty} Z^{-1}\left(\frac{2\mu\pi}{\beta}\right)\right] \\
&= \frac{1}{\beta}\sum_{\mu=-\infty}^{+\infty} Z^{-1}\left(\frac{2\mu\pi}{\beta}\right),
\end{aligned} \tag{7.46}$$

where $\mathcal{L}_s\{u(t)\}=Z^{-1}(s)=Z^{-1}(-s)$ has been used. Note that Pr disappears from the integration of (7.46) since the integrand is finite at $\tau=0$.

Similarly, from (7.44) we have

$$\begin{aligned}
\sigma_{pp}[\beta] &= m^2\int_{-\infty}^{+\infty} d\tau \left[\frac{-\ddot{w}(\tau)}{2i}\right]\left[\frac{-i}{\beta}\,\mathrm{Pr}\coth(\pi\tau/\beta)\right]^* \\
&= \frac{-m^2}{\beta}\int_0^{\infty} d\tau\, \ddot{u}(\tau)\coth(\pi\tau/\beta) \\
&= \frac{m}{\beta}\sum_{\mu=-\infty}^{+\infty}\left[\frac{Z(s)-ms^2}{Z(s)}\right]_{s=2\mu\pi/\beta}
\end{aligned}$$

$$= \frac{m}{\beta} \sum_{\mu=-\infty}^{+\infty} Z^{-1}\left(\frac{2\mu\pi}{\beta}\right)\left\{m\omega_0^2 + \left(\frac{2\mu\pi}{\beta}\right)\bar{\eta}\left[\frac{2\mu\pi}{\beta}\right]\right\}, \tag{7.47}$$

where we have used

$$\mathcal{L}_s\{\ddot{u}(t)\} = \frac{s^2}{Z(s)} - \dot{u}(0) = \frac{ms^2 - Z(s)}{mZ(s)}. \tag{7.48}$$

It is interesting to note that $2\mu\pi/\beta$ in the above two series is the Matsubara frequency of the temperature Green's function [67], and $Z^{-1}(2\mu\pi/\beta)$ follows as the Matsubara susceptibility analogous to the susceptibility $\alpha(\omega)$ [62]. Eqs. (7.46) and (7.47) are convenient for practical calculation of $\sigma_{qq}[\beta]$ and $\sigma_{pp}[\beta]$.

Chapter 8

Quantum Langevin Equation

In this chapter, we shall begin to take the thermodynamic limit and derive the quantum Langevin equation for the position operator of the Brownian particle from the independent-oscillator model. The purposes of studying the quantum Langevin equation are: (1) Among all equivalent formalisms, the quantum Langevin equation is the most suitable one for constructing the dissipative heat bath. (2) The quantum Langevin equation is the simplest approach for some special problems of quantum harmonic Brownian motion. (3) The independent-oscillator model is a well-defined quantum system which can be studied by first principles of quantum mechanics. But before we can make any prediction from it, we have first to verify the validity of this model. This verification can be done via the construction of the quantum Langevin equation, and we will show that in the classical limit this quantum-mechanical model gives results compatible with the classical phenomenological theories discussed in Chap. 2.

8.1 Spectral Density

In this section, we shall define the spectral density for the heat-bath oscillators of the independent-oscillator model. As we discussed in Sec. 6.4, the manifestation of resonant behavior is the mechanism for the heat-bath oscillators being able to model a dissipative heat bath. Therefore in order to define the spectral density, we should first examine in more detail the behavior of $Z(s)$ near the imaginary axis.

Using (6.51), we can express $\bar{\eta}[\epsilon - i\omega]$ in (6.24) as

$$\bar{\eta}[\epsilon - i\omega] = \tfrac{1}{2}\sum_{\ell} m_\ell \omega_\ell^2 \left[\frac{1}{-i\omega - i\omega_\ell + \epsilon} + \frac{1}{-i\omega + i\omega_\ell + \epsilon}\right] \tag{8.1}$$

$$= -i\,\mathrm{Pr}\sum_{\ell} m_\ell \omega_\ell^2 \left(\frac{\omega}{\omega_\ell^2 - \omega^2}\right) + \frac{\pi}{2}\sum_{\ell} m_\ell \omega_\ell^2 \Big[\delta(\omega + \omega_\ell) + \delta(\omega - \omega_\ell)\Big].$$

Note that the real part of $\bar{\eta}[\epsilon - i\omega]$ is an even function, while the imaginary part is an odd function of ω.

The spectral density $\rho(\omega)$ is then defined as the real part of $\bar{\eta}[\epsilon - i\omega]$:

$$\rho(\omega) = \mathrm{Re}\,\bar{\eta}[\epsilon - i\omega] = \frac{\pi}{2}\sum_{\ell} m_\ell \omega_\ell^2 \Big[\delta(\omega + \omega_\ell) + \delta(\omega - \omega_\ell)\Big], \tag{8.2}$$

which is a non-negative even function of ω. Using this $\rho(\omega)$, we have the following general relation:

$$\sum_{\ell} m_\ell \omega_\ell^2 G(\omega_\ell) = \frac{1}{\pi}\int_{-\infty}^{+\infty} d\omega\, \rho(\omega) G(\omega), \tag{8.3}$$

for any even function $G(\omega)$. Accordingly, $\bar{\eta}[\epsilon - i\omega]$ can be transformed into

$$\bar{\eta}[\epsilon - i\omega] = -i\,\mathrm{Pr}(\omega) + \rho(\omega), \tag{8.4}$$

where

$$\mathrm{Pr}(\omega) \equiv \frac{1}{\pi}\,\mathrm{Pr}\int_{-\infty}^{+\infty} d\nu\, \rho(\nu)\left(\frac{\omega}{\nu^2 - \omega^2}\right). \tag{8.5}$$

Substituting (8.4) into (6.23), we get

$$Z(\epsilon - i\omega) = -m(\omega^2 - \omega_0^2) - \omega\,\mathrm{Pr}(\omega) - i\omega\rho(\omega). \tag{8.6}$$

Note that

$$Z(\epsilon - i\omega) \neq 0,\ \forall\, \omega \in \mathbf{R}, \tag{8.7}$$

since all zeroes of $Z(s)$ lie on the imaginary axis of the complex s-plane. Using (8.6), $\alpha(\omega)$ in (6.45) becomes

$$\alpha(\omega) = |\alpha(\omega)|^2\Big[-m(\omega^2 - \omega_0^2) - \omega\,\mathrm{Pr}(\omega) + i\omega\rho(\omega)\Big], \tag{8.8}$$

hence

$$\alpha''(\omega) = |\alpha(\omega)|^2 \omega \rho(\omega). \tag{8.9}$$

In terms of $\rho(\omega)$ we can also transform $\eta(t)$ in (6.16), as an even function of $t \in \mathbf{R}$, into the integral form:

$$\begin{aligned} \eta(t) &= \frac{1}{\pi} \int_{-\infty}^{+\infty} d\omega \rho(\omega) \cos(\omega t). \\ &= \frac{1}{2\pi} \int_{-\infty}^{+\infty} d\omega \exp(-i\omega t)[2\rho(\omega)], \end{aligned} \tag{8.10}$$

i.e., $\eta(t)$ is the Fourier transform of $2\rho(\omega)$.

Since both $\alpha(\omega)$ and $\eta(t)$ are completely determined by $\rho(\omega)$, it is convenient to work on this spectral density. In Sec. 8.3, we will show that $\rho(\omega)$ also determines the correlation function of quantum noise.

8.2 Quantum Dissipative Heat Bath

If a quantum harmonic oscillator is isolated, the time evolution of this oscillator will be periodic since the system is free of dissipation. On the other hand, if we intend to make a dissipative heat bath model out of our model Hamiltonian, then the corresponding fundamental solution $u(t)$ in (6.44) or (6.53) must decay with the increasing t.

From the Riemann–Lebesgue Lemma in real analysis [98], the fundamental solution $u(t)$ in (6.53) approaches zero as $t \to \infty$ if $\alpha''(\omega)$ is a measurable function of ω, which is impossible when n is finite. This can be understood from $\mathsf{R}(t)$ in (7.9), in which every element is a linear combination of periodic functions of t with frequencies Ω_j's, the normal mode frequencies of the total system, when n is finite. This means that $\alpha''(\omega)$ in (6.53) is a linear combination of delta functions $\delta(\omega \pm \Omega_j)$, and each delta function corresponds to a simple pole on the imaginary axis of the complex s-plane.

Therefore, in order to make $\alpha''(\omega)$ measurable, there must be a cut instead of a collection of finitely many simple poles on the imaginary axis of the complex s-plane. In other words, to construct a dissipative heat bath model we must take the thermodynamic limit $n \to \infty$, such that the accumulation of those infinitely many simple poles produces

an effective cut. From the relative positions among the ω_ℓ's and Ω_j's described in (6.28), we know that this can be achieved by a (uniform) distribution of infinitely many ω_ℓ's. In addition, we have to demand that the spectral density $\rho(\omega)$ be a measurable function since $\alpha''(\omega)$ is a function of $\rho(\omega)$ according to (8.6) and (8.9). It is interesting to note that this thermodynamic limit is equivalent to a field description of the heat bath [23, 30, 96].

From now on, we shall assume that the thermodynamic limit $n\to\infty$ is taken and $\rho(\omega)$ is a legitimate spectral density. Accordingly, $u(t)$, $v(t;\beta)$, and $\eta(t)$ all approach zero when $t\to\infty$, and we have the well-defined Fourier transform pairs: $(w(t), 2i\alpha''(\omega))$, $(v(t;\beta), \alpha''(\omega)\coth(\beta\omega/2))$, and $(\eta(t), 2\rho(\omega))$ according to (6.54), (7.34), and (8.10). Thus we are allowed to drop ϵ in all related formulas henceforward.

Conventionally, the heat bath models are classified in terms of the spectral density $I(\omega)$ instead of $\rho(\omega)$. $I(\omega)$ is defined as

$$I(\omega) = \frac{\pi}{2}\sum_\ell m_\ell\omega_\ell^3\delta(\omega-\omega_\ell), \tag{8.11}$$

which corresponds to the positive frequency part of $\rho(\omega)$ since $I(\omega<0)=0$. $I(\omega)$ can be expressed in terms of $\rho(\omega)$ as

$$I(\omega) = \omega\rho(\omega)\theta(\omega), \tag{8.12}$$

where $\theta(\omega)$ is the Heaviside unit step function. Conversely, we have

$$\omega\rho(\omega) = I(\omega) - I(-\omega). \tag{8.13}$$

Hence these two spectral densities $\rho(\omega)$ and $I(\omega)$ are mathematically equivalent.

In contrast to an ideal (quantum) heat bath which has only one parameter, the temperature β^{-1}, to characterize a quantum dissipative heat bath we have to specify both the temperature and the spectral density $I(\omega)$ or $\rho(\omega)$. We usually let the spectral density $I(\omega)$ take the form

$$I(\omega) = m\gamma\omega^a R(\omega;\Lambda)\theta(\omega), \tag{8.14}$$

where γ is a constant, and $R(\omega;\Lambda)$ is the cutoff function with Λ as the high-frequency cutoff. The heat bath is called ohmic for $a=1$, sub-ohmic for $0<a<1$, and supra-ohmic for $a>1$. Note that in defining the spectral function (8.14), we have implicitly

assumed that each coupling constant $m_\ell\omega_\ell^2$ is infinitesimal, since otherwise $I(\omega)$ will be divergent. However, this is not the weak-coupling limit [7] because the coupling between the Brownian particle and the heat bath is described by $I(\omega)$ which is finite in general.

In the literature, the cutoff function $R(\omega;\Lambda)$ usually takes the following forms:
(i) Abrupt cutoff (Debye–Zwanzig model) [10, 108]:

$$R(\omega;\Lambda) = \theta(\Lambda - \omega); \tag{8.15}$$

(ii) Lorentzian cutoff (Drude model) [38, 44, 45, 76, 95]:

$$R(\omega;\Lambda) \propto \frac{\Lambda^2}{\Lambda^2 + \omega^2}; \tag{8.16}$$

(iii) Exponential cutoff [17, 48, 61, 73]:

$$R(\omega;\Lambda) \propto \exp\left(-\omega^b/\Lambda^b\right), \qquad b = 1 \text{ or } 2. \tag{8.17}$$

It is obvious that $I(\omega)$, hence $\rho(\omega)$, is a measurable function of ω for the above three cutoff functions.

According to (8.11), by suitably choosing the distributions for m_ℓ and ω_ℓ of the heat-bath oscillators, we can construct any given physical spectral density $I(\omega)$ in the limit $n\to\infty$. Therefore we have verified that the independent-oscillator model is a legitimate model for a general environment [30].

8.3 Quantum Noise

Consider a Brownian particle immersed in a quantum dissipative heat bath modeled by the Hamiltonian (6.1). We assume that initially the Brownian particle and the heat-bath oscillators are independent of each other, i.e., the initial state of the total system is a product of the state of the Brownian particle and that of the heat-bath oscillators, the so-called factorizable initial state. If we want to model a quantum dissipative heat bath of temperature β^{-1}, the natural choice of the initial state for those independent heat-bath oscillators is the thermal state with the same temperature. According to (3.48), the characteristic function of the thermal state of the heat-bath oscillators is

$$\Phi_{bath}(x_\ell, k_\ell) = \prod_\ell \exp\left\{-\frac{1}{4}\coth(\beta\omega_\ell/2)\big(x_\ell, k_\ell\big)\mathbf{g}_\ell\begin{pmatrix} x_\ell \\ k_\ell \end{pmatrix}\right\}$$

$$= \exp\left\{-\frac{1}{4}\sum_{\ell}\coth(\beta\omega_\ell/2)\big(x_\ell, k_\ell\big)\mathrm{g}_\ell\begin{pmatrix}x_\ell\\ k_\ell\end{pmatrix}\right\}. \tag{8.18}$$

Using $\langle\ \rangle_{bath}$ to denote the expectation value with respect to the initial state of the heat-bath oscillators, we have

$$\langle\hat{q}_\ell\rangle_{bath} = \langle\hat{p}_\ell\rangle_{bath} = 0, \tag{8.19}$$

$$\left\langle\hat{q}_\ell\hat{q}_{\ell'}\right\rangle_{bath} = \frac{\delta_{\ell\ell'}}{2m_\ell\omega_\ell}\coth(\beta\omega_\ell/2), \tag{8.20}$$

$$\left\langle\hat{p}_\ell\hat{p}_{\ell'}\right\rangle_{bath} = \frac{\delta_{\ell\ell'}}{2}m_\ell\omega_\ell\coth(\beta\omega_\ell/2), \tag{8.21}$$

$$\left\langle\hat{q}_\ell\hat{p}_{\ell'}\right\rangle_{bath} = -\left\langle\hat{p}_\ell\hat{q}_{\ell'}\right\rangle_{bath} = \tfrac{i}{2}\delta_{\ell\ell'}. \tag{8.22}$$

In the following, we shall argue that under the above assumptions, the force term $\hat{f}(t)$ on the right hand side of (6.18) serves as the quantum noise (or quantum random force) [31], which is the quantum analogue of the colored noise discussed in Sec. 2.5.

(I) Since $\hat{f}(t)$ is a linear combination of $\hat{q}_\ell(0)$ and $\hat{p}_\ell(0)$, and the thermal state of the heat-bath oscillators is Gaussian, we conclude that $\hat{f}(t)$ is a quantum Gaussian process with respect to $\langle\ \rangle_{bath}$.

(II) $\langle\hat{f}(t)\rangle_{bath}=0$ according to (8.19).

(III) The symmetrized correlation function of $\hat{f}(t)$ is defined as

$$K(t_1,t_2;\beta) = \tfrac{1}{2}\left\langle\hat{f}(t_1)\hat{f}(t_2)+\hat{f}(t_2)\hat{f}(t_1)\right\rangle_{bath}. \tag{8.23}$$

From (8.20)–(8.22), we have

$$\begin{aligned}\left\langle\hat{f}(t_1)\hat{f}(t_2)\right\rangle_{bath} &= \tfrac{1}{2}\sum_{\ell}m_\ell\omega_\ell^3\coth(\beta\omega_\ell/2)\cos(\omega_\ell(t_1-t_2))\\ &\quad - \tfrac{i}{2}\sum_{\ell}m_\ell\omega_\ell^3\sin(\omega_\ell(t_1-t_2)),\end{aligned} \tag{8.24}$$

hence the explicit expression of the correlation function $K(t_1,t_2;\beta)$ in (8.23) is

$$\begin{aligned}K(t_1,t_2;\beta) &= \tfrac{1}{2}\sum_{\ell}m_\ell\omega_\ell^3\coth(\beta\omega_\ell/2)\cos(\omega_\ell(t_1-t_2))\\ &= \frac{1}{2\pi}\int_{-\infty}^{+\infty}d\omega\,\rho(\omega)\omega\coth(\beta\omega/2)\cos(\omega(t_1-t_2))\\ &= \frac{1}{2\pi}\int_{-\infty}^{+\infty}d\omega\,\rho(\omega)\omega\coth(\beta\omega/2)\exp(\pm i\omega(t_1-t_2)).\end{aligned} \tag{8.25}$$

Since $\omega\coth(\beta\omega/2)$ is an even function of ω for finite β, it is suitable to use (8.3) to convert the sum into an integration.

Because $K(t_1,t_2;\beta)=K(t_1-t_2,0;\beta)$ according to (8.25), $\hat{f}(t)$ is a stationary process with respect to $\langle\ \rangle_{bath}$. Hence we can merely study

$$K(t,0;\beta)\equiv K(t;\beta)=\frac{1}{2\pi}\int_{-\infty}^{+\infty}d\omega\,\exp(-i\omega t)\omega\rho(\omega)\coth(\beta\omega/2)\,,\quad t\in\mathbf{R}\,, \tag{8.26}$$

and accordingly $\omega\rho(\omega)\coth(\beta\omega/2)$ can be interpreted as the power spectrum of $\hat{f}(t)$, the quantum analogue of $I_F(\omega)$ in (2.29). $K(t;\beta)$ is usually called the noise kernel in the path-integral approach.

In order to discuss the classical limit of $K(t;\beta)$, let us first approximate $K(t;\beta)$ in (8.26) by

$$K(t;\beta)\approx\frac{\hbar}{2\pi}\int_{-\Lambda}^{\Lambda}d\omega\,\exp(-i\omega t)\omega\rho(\omega)\coth(\beta\hbar\omega/2)\,, \tag{8.27}$$

where Λ is the cutoff frequency. Note that we have let $\hbar$ appear explicitly in the above equation. If we impose the classical limit $\beta\hbar\Lambda\ll 1$, which corresponds to the high temperature limit and/or the limit $\hbar\to 0$, then it follows that

$$K(t;\beta)\approx\frac{1}{\pi\beta}\int_{-\Lambda}^{\Lambda}d\omega\,\exp(-i\omega t)\rho(\omega)\approx\frac{\eta(t)}{\beta}\,, \tag{8.28}$$

which is analogous to the correlation function of the classical colored noise given by (2.28).

From (I)–(III), we conclude that $\hat{f}(t)$ serves as a quantum analogue of the classical colored noise. As a comparison, we also calculate the commutator of $\hat{f}(t_1)$ and $\hat{f}(t_1)$ as follows:

$$\begin{aligned}\left[\hat{f}(t_1),\hat{f}(t_2)\right] &= -i\sum_{\ell}m_\ell\omega_\ell^3\sin(\omega_\ell(t_1-t_2))\hat{\mathbf{1}}\\ &= \frac{-i}{\pi}\int_{-\infty}^{+\infty}d\omega\,\rho(\omega)\omega\sin(\omega(t_1-t_2))\hat{\mathbf{1}}\\ &= i\dot{\eta}(t_1-t_2)\hat{\mathbf{1}}\,,\end{aligned} \tag{8.29}$$

which is an odd function of (t_1-t_2) and is temperature-independent just like (7.38) and (7.39).

8.4 Quantum Langevin Equation

From the above discussions, we find that if (i) $n \to \infty$ and the spectral density of the heat-bath oscillators is defined according to (8.14), and (ii) the initial state of the total system is factorizable with the heat-bath oscillators being in a thermal state, then it is legitimate to call (6.18) the quantum (generalized) Langevin equation for the position operator $\hat{q}$. Note that $\eta(t)/m$ and $\hat{f}(t)$ in (6.18) are, individually, the quantum analogues of the memory kernel and colored noise in the classical generalized Langevin equation (2.26). The solution of (6.18) is given by (6.38).

Comparing the quantum Langevin equation (6.18) with $f_X(t) = 0$ with the classical generalized Langevin equation (2.26), we find that: (1) There is no classical correspondent to the term $-\hat{q}(0)\eta(t)$ in (6.18), which is an intrinsic defect of the linear-coupling and independent-oscillator models. (2) The lower limit of the integral term in (6.18) is $t = 0$, in contrast to that in (2.26) which is taken to be $-\infty$. This is because in Chap. 6, we took $t = 0$ as the initial moment when we solved the equations of motion. Therefore the stationary solution of (6.18), which corresponds to the thermal equilibrium state of the Brownian particle, only exists when $t \to \infty$ in general . On the other hand, for the classical generalized Langevin state (2.26), the stationary solution exists for any finite t.

For the thermal equilibrium state of the Brownian particle, since $\alpha''(\omega)\coth(\beta\omega/2)$ and $v(t;\beta)$ form a Fourier transform pair, we can interpret $\alpha''(\omega)\coth(\beta\omega/2)$ as the power spectrum of the stationary quantum process $\hat{q}(t)$. Compared with (8.9), we get

$$\alpha''(\omega)\coth(\beta\omega/2) = |\alpha(\omega)|^2\Big[\omega\rho(\omega)\coth(\beta\omega/2)\Big]. \tag{8.30}$$

According to the discussion in Sec. 8.3, $\omega\rho(\omega)\coth(\beta\omega/2)$ is interpreted as the power spectrum of the quantum noise $\hat{f}(t)$, hence for the stationary solution of the quantum Langevin equation (6.18), Eq. (8.30) is the quantum analogue of (2.31). Through the successful derivation of the quantum Langevin equation from the independent-oscillator model, the validity of this model is herewith verified.

The advantage of the quantum Langevin equation (6.18) are: (1) Its solution (6.38) is state-independent, hence we can take the expectation value with respect to any given initial state (not necessarily factorizable) to calculate the time evolution of the mean vector of the Brownian particle. (2) Using the solution of the quantum Langevin equation,

we can derive the time evolution of the covariance matrix of the Brownian particle with respect to an arbitrary factorizable initial state, which will be discussed in Sec. 10.3.

The limitations of the quantum Langevin equation are: (1) It is derived under the assumption that the initial state is factorizable, hence it cannot be applied to the general problems with non-factorizable initial states. (2) With respect to the factorizable initial states, it is inconvenient (although not impossible in principle) to study the relaxation of the non-Gaussian initial states of the Brownian particle using the quantum Langevin equation, because these kind of states cannot be completely determined by the first two moments.

8.5 Ohmic Dissipation

In this section we shall study the simplest example of quantum harmonic Brownian motion, i.e., the case corresponding to ohmic dissipation with infinite cutoff. In this case $I(\omega)=m\gamma\omega\theta(\omega)$, and $\rho(\omega)=m\gamma$ becomes the friction constant. From (8.10),

$$\eta(t) = \frac{m\gamma}{\pi}\int_{-\infty}^{+\infty} d\omega \exp(-i\omega t) = 2m\gamma\delta(t), \tag{8.31}$$

and accordingly the quantum Langevin equation (6.18) with $f_X(t)=0$ reduces to

$$\ddot{\hat{q}}(t) + \gamma\dot{\hat{q}}(t) + \omega_0^2\hat{q}(t) = -2\gamma\delta(t)\hat{q}(0) + \frac{\hat{f}(t)}{m}, \tag{8.32}$$

or equivalently,

$$\ddot{\hat{q}}(t) + \gamma\dot{\hat{q}}(t) + \Big(\omega_0^2 + 2\gamma\delta(t)\Big)\hat{q}(t) = \frac{\hat{f}(t)}{m}, \tag{8.33}$$

where (1.11) has been used.

The corresponding generalized susceptibility $\alpha(\omega)$ takes the form

$$\alpha(\omega) = \frac{1}{m(-\omega^2 - i\gamma\omega + \omega_0^2)}, \tag{8.34}$$

hence

$$\alpha''(\omega) = \frac{\gamma\omega/m}{(\omega^2-\omega_0^2)^2 + (\gamma\omega)^2}. \tag{8.35}$$

The fundamental solution $u(t)$ for (8.32) is easy to solve using (6.44). Let us consider the underdamped case as an example. In this case the two zeroes for the denominator in (8.34) can be expressed as

$$\varpi_{1,2} = \pm\nu_\Omega - i\frac{\gamma}{2}, \qquad \nu_\Omega \equiv \sqrt{\omega_0^2 - \frac{\gamma^2}{4}} \in \mathbf{R}. \tag{8.36}$$

Using a contour integral on the complex ϖ-plane, we get from (6.44):

$$u(t) = \frac{\sin(\nu_\Omega t)}{m\nu_\Omega} \exp\left(-\tfrac{1}{2}\gamma t\right). \tag{8.37}$$

Note that the corresponding $\ddot{u}(t)$ has a jump at $t=0$.

In contrast to the classical Langevin equation, where ohmic dissipation is associated with white noise, the power spectrum of the ohmic quantum noise is $m\gamma\omega\coth(\beta\omega/2)$, which is obviously colored. This difference can be traced to the failure of the classical equipartition law in quantum statistical mechanics. In the classical limit discussed in Sec. 8.3, we have

$$K(t;\beta) \approx \frac{2m\gamma}{\beta}\delta(t), \tag{8.38}$$

which corresponds to classical white noise discussed in Sec. 2.4. Hence we find that, using ohmic dissipation accompanied by the classical limit, the quantum Langevin equation (8.32) becomes the analogue of the classical Langevin equation (2.21) with an extra $\delta(t)$-term, which can be interpreted as a frequency shift according to (8.33).

Before closing this section, let us discuss two more interesting questions. The first one is the weak-coupling limit of the ohmic quantum dissipative heat bath [7], which corresponds to the case $\gamma\to 0$. From (8.35), we have under this limit:

$$\begin{aligned} \alpha''(\omega) &= \frac{\mathrm{sign}(\omega)}{m}\left[\frac{\epsilon}{(\omega^2-\omega_0^2)^2+\epsilon^2}\right] \\ &= \frac{\pi}{m}\mathrm{sign}(\omega)\delta(\omega^2-\omega_0^2) \\ &= \frac{\pi}{2m\omega_0}\Big[\delta(\omega-\omega_0)-\delta(\omega+\omega_0)\Big]. \end{aligned} \tag{8.39}$$

Hence the heat bath model reduces to an ideal heat bath free of dissipation. According to (7.43) and (7.44), in this limit the thermal equilibrium state of the Brownian particle is consistent with the thermal state of a harmonic oscillator. It is obvious that this conclusion is also true with respect to a finite cutoff.

The second interesting question is the long time behavior at low temperature. Let us use $v(t;\beta)$ with large $t>0$ as an example to compute the so-called long-time tail [38, 44, 45, 51, 76]. The formulation we shall use is a generalization of that discussed in Sec. 7.5.

Applying the Parseval–Plancherel theorem (7.45) to (7.34), in analogue to (7.46) we have for any $t>0$:

$$\begin{aligned} v(t;\beta) &= \frac{1}{2\pi}\int_{-\infty}^{+\infty} d\omega \Big[\alpha''(\omega)\Big]\Big[\exp(i\omega t)\coth(\beta\omega/2)\Big]^* \\ &= \int_{-\infty}^{+\infty} d\tau \left[\frac{w(\tau)}{2i}\right]\left[\frac{-i}{\beta}\,\mathrm{Pr}\coth(\pi(\tau-t)/\beta)\right]^* \\ &= \frac{1}{2\beta}\int_0^{\infty} d\tau u(\tau)\Big[\coth(\pi(\tau+t)/\beta)+\mathrm{Pr}\coth(\pi(\tau-t)/\beta)\Big]. \end{aligned} \tag{8.40}$$

This formula is especially useful for low temperature expansions. For the special case that the temperature approaches absolute zero and t is large, we get the asymptotic value of $v(t;\beta)$ as

$$\begin{aligned} v(t;\beta) &\approx \frac{1}{\pi}\,\mathrm{Pr}\int_0^{\infty} d\tau u(\tau)\left[\frac{\tau}{\tau^2-t^2}\right] \\ &\approx \frac{-1}{\pi t^2}\int_0^{\infty} d\tau\, u(\tau)\tau \\ &= \frac{-1}{\pi t^2}\left[(-i)\frac{\partial\alpha(\omega)}{\partial\omega}\right]_{\omega=0} \\ &= \frac{-\gamma}{\pi m\omega_0^4 t^2}, \end{aligned} \tag{8.41}$$

where (6.46) has been used, and we have taken advantage of $u(t)$ being very small for large t.

Part III

The Dynamics

Chapter 9

General Formulations

9.1 Time Evolution of the Brownian Particle

From the discussion in Sec. 5.4, we know that once we have the explicit form of the initial characteristic function, we can immediately write down the time evolution of the reduced characteristic function in terms of the phase flow. For quantum harmonic Brownian motion, the subsystem **A** is the Brownian particle and **B** is collection of the heat-bath oscillators according to the notations in Chap. 5. With respect to the Hamiltonian (6.1), if the characteristic function of the initial state of the total system is $\Phi_{ini}(\boldsymbol{z})$, according to (5.11) the time evolution of the reduced characteristic function $\Phi_0(x, k; t)$, which corresponds to the reduced density operator for the Brownian particle at t, is given by

$$\Phi_0(x, k; t) = \Phi_{ini}\Big((x, \mathbf{0}, k, \mathbf{0})\mathsf{R}^{-\mathsf{T}}(t)\Big) \equiv \Phi_{ini}\Big(\tilde{\boldsymbol{z}}(t)\Big), \tag{9.1}$$

where $(x, \mathbf{0}, k, \mathbf{0})$ is a vector in the $2N$-dimensional phase space with only two non-zero components, and $\tilde{\boldsymbol{z}}(t)$ is a $2N$-dimensional vector defined as

$$\tilde{\boldsymbol{z}}(t) = \Big(x, \mathbf{0}, k, \mathbf{0}\Big)\mathsf{R}^{-\mathsf{T}}(t) = \Big(x, \mathbf{0}, k, \mathbf{0}\Big)\mathsf{J}^{\mathsf{T}}\mathsf{R}(t)\mathsf{J}, \tag{9.2}$$

which is a function of x, k, and t. *Note that x_ℓ and k_ℓ are not involved in the definition of $\tilde{\boldsymbol{z}}(t)$!* Comparing (9.2) with (6.32) and (6.35), we can decompose

$$\tilde{\boldsymbol{z}}(t) = \Big(\tilde{x}(t), \tilde{x}_1(t), \tilde{x}_2(t), \cdots, \tilde{x}_n(t), \tilde{k}(t), \tilde{k}_1(t), \tilde{k}_2(t), \cdots, \tilde{k}_n(t)\Big) \tag{9.3}$$

into the following expressions:

$$\begin{pmatrix} \tilde{x}_j(t) \\ \tilde{k}_j(t) \end{pmatrix} \equiv \mathsf{r}_j(t) \begin{pmatrix} x \\ k \end{pmatrix}, \tag{9.4}$$

where

$$\mathsf{r}_0(t) = \begin{pmatrix} m\dot{u}(t) & -u(t) \\ & \\ -m^2\ddot{u}(t) & m\dot{u}(t) \end{pmatrix} = \mathsf{j}^\top [\![\mathsf{R}(t)]\!]^\top \mathsf{j}, \tag{9.5}$$

and

$$\mathsf{r}_\ell(t) = \begin{pmatrix} m\dot{u}_\ell(t) & -u_\ell(t) \\ & \\ -mm_\ell\ddot{u}_\ell(t) & m_\ell\dot{u}_\ell(t) \end{pmatrix}, \tag{9.6}$$

with the initial values

$$\mathsf{r}_0(0) = \begin{pmatrix} 1 & 0 \\ 0 & 1 \end{pmatrix}, \quad \text{and } \mathsf{r}_\ell(0) = \mathbf{0}. \tag{9.7}$$

The quantum dynamics of the Brownian particle is then completely determined by the matrices $\mathsf{r}_j(t)$, whose elements are the elements of the 0-th and N-th rows in $\mathsf{R}(t)$. Hence our claim in Part II that only these two rows in $\mathsf{R}(t)$ are needed for studying the dynamics of the Brownian particle has been confirmed.

Eq. (9.1) is the main result of this paper. We shall show in the following two chapters that it can be applied to quantum harmonic Brownian motion with great efficiency. If the model Hamiltonian is (6.6) instead of (6.1), according to (5.11) there will be an extra factor $\exp\{i(x,\mathbf{0},k,\mathbf{0})\mathsf{J}\boldsymbol{a}^\top(t)\}$ in (9.1), which corresponds to a shift in the mean vector of the Brownian particle and is easier to deal with using the quantum Langevin equation discussed in Chap. 8.

9.2 Two General Relations

Since there is no coupling term involving the momentum operators in the model Hamiltonians, there exist two general relations which are useful in simplifying the calculations. With respect to the model Hamiltonian (6.1) or (6.6), the Heisenberg equation of motion for $\hat{q}$ of the Brownian particle takes the form

$$m\frac{d\hat{q}}{dt} = \hat{p}, \tag{9.8}$$

which is the quantum correspondent of (6.8). Taking the expectation value of the above equation with respect to a given physical state, we have

$$m\frac{d}{dt}\Big\langle \hat{q}(t)\Big\rangle = \Big\langle \hat{p}(t)\Big\rangle. \tag{9.9}$$

Accordingly, the time derivative of $\sigma_{qq}(t)$ is related to $\sigma_{qp}(t)$ by

$$\begin{aligned}\frac{m}{2}\frac{d}{dt}\sigma_{qq}(t) &= \frac{m}{2}\frac{d}{dt}\Big[\Big\langle \hat{q}(t)^2\Big\rangle - \Big\langle \hat{q}(t)\Big\rangle^2\Big] \\ &= \frac{1}{2}\Big\langle \hat{q}(t)\hat{p}(t) + \hat{p}(t)\hat{q}(t)\Big\rangle - \Big\langle \hat{q}(t)\Big\rangle\Big\langle \hat{p}(t)\Big\rangle \\ &= \sigma_{qp}(t). \end{aligned} \tag{9.10}$$

Since (9.9) and (9.10) are valid for any given state, we can always calculate $\langle \hat{p}(t)\rangle$ and $\sigma_{qp}(t)$ from the time derivatives of $\langle \hat{q}(t)\rangle$ and $\sigma_{qq}(t)$, respectively. Therefore we shall henceforward omit the explicit expression for $\sigma_{qp}(t)$. Note that due to the coupling terms in the model Hamiltonians, there is no simple relation between $\sigma_{qq}(t)$ and $\sigma_{pp}(t)$ nor between $\sigma_{qp}(t)$ and $\sigma_{pp}(t)$.

Chapter 10

Factorizable Initial States

In this chapter we shall consider the time evolution of a Brownian particle whose initial state is independent of that of the heat-bath oscillators, which is a thermal state. In other words, the initial state of the total system is the factorizable state that we assumed in deriving the quantum Langevin equation. As we mentioned in Chap. 8, the quantum Langevin equation is only convenient for obtaining the time evolution of the mean vector. For general problems, we shall use the reduced characteristic function to study the time evolution of the Brownian particle.

Throughout this chapter, the density operator of the total system corresponding to the factorizable initial state is assumed to be

$$\hat{\varrho}(t=0) = \hat{\varrho}_A \hat{\varrho}_B, \tag{10.1}$$

where the density operator $\hat{\varrho}_A$ corresponds to an arbitrary physical state of the Brownian particle, and $\hat{\varrho}_B$ to the thermal state of the heat-bath oscillators at temperature β^{-1} as discussed in Sec. 8.3.

10.1 Time Evolution: General Formulation

We define the characteristic function corresponding to the density operator (10.1) of the factorizable initial state as

$$\Phi_{ini}(z) = \Phi_A(x,k)\Phi_B(x_\ell, k_\ell), \tag{10.2}$$

where the characteristic function $\Phi_A(x,k)$ corresponds to $\hat{\varrho}_A$, and $\Phi_B(x_\ell,k_\ell)$, which is the same as $\Phi_{bath}(x_\ell,k_\ell)$ in (8.18), corresponds to $\hat{\varrho}_B$. Note that both $\Phi_A(x,k)$ and $\Phi_B(x_\ell,k_\ell)$ are individually normalized.

According to the formulations in Sec. 9.1, the time evolution of the reduced characteristic function for the Brownian particle with respect to the factorizable initial state (10.2) is

$$\Phi_0(x,k;t) = \Phi_A\Big(\tilde{x}(t),\tilde{k}(t)\Big)\Phi_B\Big(\tilde{x}_\ell(t),\tilde{k}_\ell(t)\Big). \tag{10.3}$$

Substituting (9.4) into $\Phi_B\Big(\tilde{x}_\ell(t),\tilde{k}_\ell(t)\Big)$ and comparing with (8.18), we get the following exact expression:

$$\begin{aligned}\Phi_B\Big(\tilde{x}_\ell(t),\tilde{k}_\ell(t)\Big) &= \exp\left\{-\frac{1}{4}\sum_\ell \coth(\beta\omega_\ell/2)\big(x,k\big)\mathsf{r}_\ell^{\mathsf{T}}(t)\mathsf{g}_\ell\mathsf{r}_\ell(t)\begin{pmatrix}x\\k\end{pmatrix}\right\}\\ &\equiv \exp\left\{-\frac{1}{2}\big(x,k\big)\Theta(t;\beta)\begin{pmatrix}x\\k\end{pmatrix}\right\},\end{aligned} \tag{10.4}$$

which is the analogue of the influence functional in the path-integral approach. The 2×2 matrix $\Theta(t;\beta)$ is defined as

$$\Theta(t;\beta) = \tfrac{1}{2}\sum_\ell \coth(\beta\omega_\ell/2)\mathsf{r}_\ell^{\mathsf{T}}(t)\mathsf{g}_\ell\mathsf{r}_\ell(t) \tag{10.5}$$

$$= \sum_\ell \frac{m_\ell}{2\omega_\ell}\coth(\beta\omega_\ell/2)\begin{pmatrix} m^2[\ddot{u}_\ell(t)^2+\omega_\ell^2\dot{u}_\ell(t)^2] & -m\dot{u}_\ell(t)[\ddot{u}_\ell(t)+\omega_\ell^2u_\ell(t)] \\ -m\dot{u}_\ell(t)[\ddot{u}_\ell(t)+\omega_\ell^2u_\ell(t)] & \dot{u}_\ell(t)^2+\omega_\ell^2u_\ell(t)^2\end{pmatrix}.$$

At $t=0$, $\Theta(0;\beta)=\mathbf{0}$ according to the initial values of $\mathsf{r}_\ell(t)$ in (9.7), hence we have

$$\Phi_B\Big(\tilde{x}_\ell(0),\tilde{k}_\ell(0)\Big) = 1 \tag{10.6}$$

according to the normalization condition of $\Phi_B(\tilde{x}_\ell,\tilde{k}_\ell)$. It follows that

$$\Phi_0(x,k;t=0) = \Phi_A\Big(\tilde{x}(0),\tilde{k}(0)\Big) = \Phi_A(x,k), \tag{10.7}$$

which means that there is no initial influence from the heat bath on the Brownian particle, consistent with the assumption that the initial state is factorizable.

The explicit expressions for the elements in $\Theta(t;\beta)$ can be calculated by using (6.33), (6.34), and (6.36), with the aid of (8.25) and (8.26) as follows:

$$\begin{aligned}\Theta_{11}(t;\beta) &= m^2\int_0^t\int_0^t d\tau_1 d\tau_2 \dot{u}(\tau_1)\dot{u}(\tau_2)K(\tau_1-\tau_2;\beta)\\ &= \frac{m^2}{2\pi}\int_{-\infty}^{+\infty} d\omega\omega\rho(\omega)\coth(\beta\omega/2)\left|\int_0^t d\tau\,\exp(i\omega\tau)\dot{u}(\tau)\right|^2, \qquad (10.8)\end{aligned}$$

$$\begin{aligned}\Theta_{22}(t;\beta) &= \int_0^t\int_0^t d\tau_1 d\tau_2 u(\tau_1)u(\tau_2)K(\tau_1-\tau_2;\beta)\\ &= \frac{1}{2\pi}\int_{-\infty}^{+\infty} d\omega\omega\rho(\omega)\coth(\beta\omega/2)\left|\int_0^t d\tau\,\exp(i\omega\tau)u(\tau)\right|^2, \qquad (10.9)\end{aligned}$$

$$\begin{aligned}&\Theta_{12}(t;\beta) = \Theta_{21}(t;\beta)\\ &= -m\int_0^t\int_0^t d\tau_1 d\tau_2 \dot{u}(\tau_1)u(\tau_2)K(\tau_1-\tau_2;\beta)\\ &= -\frac{m}{2}\dot{\Theta}_{22}(t;\beta), \qquad (10.10)\end{aligned}$$

where $K(t;\beta)$ is the correlation function of the quantum noise defined in (8.26).

Summarizing the above results, we get the time evolution of the reduced characteristic function for the Brownian particle as

$$\Phi_0(x,k;t) = \Phi_A\Big(\tilde{x}(t),\tilde{k}(t)\Big)\exp\left\{-\frac{1}{2}\Big(x,k\Big)\Theta(t;\beta)\begin{pmatrix}x\\ k\end{pmatrix}\right\}, \qquad (10.11)$$

which is completely determined by the initial state of the Brownian particle, the fundamental solution $u(t)$, and the spectral density as well as the temperature of the heat bath. Note that the elements of the matrix $\Theta(t;\beta)$ depend explicitly on the spectral density $\rho(\omega)$, which means that (10.11) depends on the cutoff frequency Λ in (8.14).

10.2 Approach to Equilibrium

In this section we shall prove that for an arbitrary factorizable initial state, as time $t\to\infty$ the Brownian particle always approaches the thermal equilibrium state defined in Chap. 7.

As discussed in Sec. 8.2, if we take the thermodynamic limit $n\to\infty$ and use the measurable spectral density $\rho(\omega)$, then the fundamental solution $u(t)$ approaches zero as

$t \to \infty$ according to the Riemann-Lebesgue lemma. Similarly, $\dot{u}(t)$ and $\ddot{u}(t)$ also approach zero in this limit according to (6.53). Hence we have

$$\lim_{t\to\infty} \mathrm{r}_0(t) = \mathbf{0}, \tag{10.12}$$

and

$$\lim_{t\to\infty} \Phi_A\Big(\tilde{x}(t), \tilde{k}(t)\Big) = \Phi_A(0,0) = 1 \tag{10.13}$$

according to the normalization condition on $\Phi_A(x,k)$. Thus we find that the final state of the Brownian particle is independent of its initial state. As $t \to \infty$, the reduced characteristic function for the Brownian particle takes the form

$$\begin{aligned} \lim_{t\to\infty} \Phi_0(x,k;t) &= \lim_{t\to\infty} \exp\left\{-\frac{1}{2}\Big(x,k\Big)\Theta(t;\beta)\begin{pmatrix} x \\ k \end{pmatrix}\right\} \\ &\equiv \exp\left\{-\frac{1}{2}\Big(x,k\Big)\Theta(\infty;\beta)\begin{pmatrix} x \\ k \end{pmatrix}\right\}. \end{aligned} \tag{10.14}$$

The explicit expressions for the elements in $\Theta(\infty,\beta)$ can be obtained by applying (6.46) and (8.9) to (10.8)–(10.10):

$$\begin{aligned} \Theta_{11}(\infty;\beta) &= \frac{m^2}{2\pi}\int_{-\infty}^{+\infty} d\omega\, \omega\rho(\omega)\coth(\beta\omega/2)\left|\int_0^\infty d\tau\, \exp(i\omega\tau)\dot{u}(\tau)\right|^2 \\ &= \frac{m^2}{2\pi}\int_{-\infty}^{+\infty} d\omega\, \omega^3\rho(\omega)\coth(\beta\omega/2)|\alpha(\omega)|^2 \\ &= \frac{m^2}{2\pi}\int_{-\infty}^{+\infty} d\omega\, \omega^2\alpha''(\omega)\coth(\beta\omega/2), \end{aligned} \tag{10.15}$$

$$\begin{aligned} \Theta_{22}(\infty;\beta) &= \frac{1}{2\pi}\int_{-\infty}^{+\infty} d\omega\, \omega\rho(\omega)\coth(\beta\omega/2)\left|\int_0^\infty d\tau\, \exp(i\omega\tau)u(\tau)\right|^2 \\ &= \frac{1}{2\pi}\int_{-\infty}^{+\infty} d\omega\, \omega\rho(\omega)\coth(\beta\omega/2)|\alpha(\omega)|^2 \\ &= \frac{1}{2\pi}\int_{-\infty}^{+\infty} d\omega\, \alpha''(\omega)\coth(\beta\omega/2), \end{aligned} \tag{10.16}$$

and

$$\Theta_{12}(\infty;\beta) = -\frac{m}{2}\dot{\Theta}_{22}(\infty;\beta) = 0. \tag{10.17}$$

Note that we have omitted $i\epsilon$ from the kernel $\exp(i\omega\tau)$ in (10.15) and (10.16). This is because, after taking the thermodynamic limit, both Fourier–Laplace transforms of $u(t)$ and $\dot{u}(t)$ converge.

Comparing the four elements of $\Theta(\infty;\beta)$ with (7.43) and (7.44), we find that the final characteristic function of the Brownian particle is

$$\lim_{t\to\infty} \Phi_0(x,k;t) = \exp\left\{-\frac{1}{2}\big(x,k\big)\begin{pmatrix}\sigma_{pp}[\beta] & 0\\ 0 & \sigma_{qq}[\beta]\end{pmatrix}\begin{pmatrix}x\\ k\end{pmatrix}\right\}, \tag{10.18}$$

which is exactly the characteristic function (7.41) for the Brownian particle in thermal equilibrium with the heat-bath oscillators. Therefore we have proved that, with respect to an arbitrary factorizable initial state, the Brownian particle always approaches thermal equilibrium when $t\to\infty$.

10.3 Time Evolution of the Gaussian States and the Covariance Matrices of Arbitrary Initial States

To illustrate the application of the results derived in the last two sections, let us consider a simple example where the initial state of the Brownian particle is the Gaussian state defined in Sec. 3.4. The characteristic function of this initial state is the one-mode version of (3.31):

$$\Phi_A(x,k) = \exp\left\{-\frac{1}{2}\big(x,k\big)\mathsf{j}^{\mathsf{T}}\Sigma_0\mathsf{j}\begin{pmatrix}x\\ k\end{pmatrix} + i\big(x,k\big)\mathsf{j}\begin{pmatrix}x_c\\ k_c\end{pmatrix}\right\}, \tag{10.19}$$

where (x_c, k_c) is the mean vector and Σ_0 is the 2×2 covariance matrix of this one-mode Gaussian state.

Substituting (10.19) into (10.11) and using (9.5), we get the time evolution of the reduced characteristic function of the Brownian particle as

$$\begin{aligned}&\Phi_0(x,k;t) \qquad\qquad (10.20)\\ &= \exp\left\{-\frac{1}{2}\big(x,k\big)\Big[\mathsf{j}^{\mathsf{T}}[\![\mathsf{R}(t)]\!]\Sigma_0[\![\mathsf{R}(t)]\!]^{\mathsf{T}}\mathsf{j} + \Theta(t;\beta)\Big]\begin{pmatrix}x\\ k\end{pmatrix} + i\big(x,k\big)\mathsf{j}[\![\mathsf{R}(t)]\!]\begin{pmatrix}x_c\\ k_c\end{pmatrix}\right\}.\end{aligned}$$

From this characteristic function, we find that the mean vector follows the restricted phase flow with (x_c, k_c) as the initial value, and the covariance matrix evolves according to

$$\Sigma_0(t) = [\![\mathsf{R}(t)]\!]\,\Sigma_0\,[\![\mathsf{R}(t)]\!]^{\mathsf{T}} + \mathsf{j}^{\mathsf{T}}\Theta(t;\beta)\mathsf{j}. \tag{10.21}$$

Therefore the state is always Gaussian in the course of time evolution, and it approaches the thermal equilibrium state as $t \to \infty$.

Using the formulas in Sec. 4.2, we can generalize the above results to that of the time evolution of arbitrary factorizable initial states. Suppose that a given initial state of the Brownian particle has the initial mean vector (x_c, k_c) and the initial covariance matrix Σ_0. It is easy to prove that (i) the time evolution of the mean vector follows the restricted phase flow with (x_c, k_c) as the initial value, and (ii) the time evolution of the covariance matrix obeys (10.21). Nevertheless, (i) and (ii) cannot completely determine the time evolution of the Brownian particle for a non-Gaussian initial state.

The above results (i) and (ii) can also be obtained from the solution of the quantum Langevin equation. This can be easily done if we put (6.37) and (6.39) into the following form:

$$\begin{pmatrix} \hat{q}(t) \\ \hat{p}(t) \end{pmatrix} = [\![\mathsf{R}(t)]\!] \begin{pmatrix} \hat{q}(0) \\ \hat{p}(0) \end{pmatrix} + \int_0^t d\tau \begin{pmatrix} u(\tau) \\ m\dot{u}(\tau) \end{pmatrix} \left[\hat{f}(t-\tau) + f_X(t-\tau)\right], \tag{10.22}$$

then set $f_X(t-\tau) = 0$.

10.4 Environment-Induced Damping of Quantum Interference

In this section we discuss an interesting problem where the initial state of the Brownian particle is a superposition of two coherent states [12, 48, 73, 107]. We shall show how to use the characteristic function to calculate the damping of quantum interference due to influence of the environment in the course of time evolution.

In order to simplify the formulation, we introduce a new notation $\mathsf{z} = (x, k)$ for the vector on the Brownian phase plane. Accordingly, $\hat{D}(-\mathsf{z})$ represents the corresponding one-mode Weyl operator. Note that this notation will be employed only in this section.

We then assume that the initial state of the Brownian particle is a superposition of the following two one-mode coherent states:

$$|\mathbf{z}_a\rangle + |\mathbf{z}_b\rangle, \tag{10.23}$$

where $\mathbf{z}_a = (x_a, k_a)$ and $\mathbf{z}_b = (x_b, k_b)$ are two non-identical constant vectors on the Brownian phase plane. The mean and difference of $\mathbf{z}_a$ and $\mathbf{z}_b$ are defined as

$$\mathbf{z}_m = \frac{\mathbf{z}_a + \mathbf{z}_b}{2}, \qquad \mathbf{z}_\Delta = \mathbf{z}_a - \mathbf{z}_b. \tag{10.24}$$

The density operator corresponding to the initial state (10.23) is

$$\hat{\varrho}_A = C_A\Big(|\mathbf{z}_a\rangle + |\mathbf{z}_b\rangle\Big)\Big(\langle\mathbf{z}_a| + \langle\mathbf{z}_b|\Big), \tag{10.25}$$

where

$$C_A = \frac{1}{2\Big(1 + \mathrm{Re}\langle\mathbf{z}_a|\mathbf{z}_b\rangle\Big)} \tag{10.26}$$

is the normalization constant, with

$$\langle\mathbf{z}_a|\mathbf{z}_b\rangle = \exp\Big\{-\tfrac{1}{4}\mathbf{z}_\Delta\mathbf{g}_0\mathbf{z}_\Delta^\mathsf{T} + \tfrac{i}{2}\mathbf{z}_a\mathbf{j}\mathbf{z}_b^\mathsf{T}\Big\} \tag{10.27}$$

according to (1.48).

Using (3.12) and formulas in Sec. 1.3.1, the characteristic function of $\hat{\varrho}_A$ can be obtained as

$$\Phi_A(\mathbf{z}) = Tr\Big[\hat{\varrho}_A\hat{D}(-\mathbf{z})\Big] \equiv C_A\Big[\phi_a(\mathbf{z}) + \phi_b(\mathbf{z}) + \phi_{ab}(\mathbf{z}) + \phi_{ba}(\mathbf{z})\Big], \tag{10.28}$$

where

$$\phi_a(\mathbf{z}) \equiv \langle\mathbf{z}_a|\hat{D}(-\mathbf{z})|\mathbf{z}_a\rangle = \exp\Big\{-\tfrac{1}{4}\mathbf{z}\mathbf{g}_0\mathbf{z}^\mathsf{T} + i\mathbf{z}\mathbf{j}\mathbf{z}_a^\mathsf{T}\Big\}, \tag{10.29}$$

and

$$\phi_b(\mathbf{z}) \equiv \langle\mathbf{z}_b|\hat{D}(-\mathbf{z})|\mathbf{z}_b\rangle = \exp\Big\{-\tfrac{1}{4}\mathbf{z}\mathbf{g}_0\mathbf{z}^\mathsf{T} + i\mathbf{z}\mathbf{j}\mathbf{z}_b^\mathsf{T}\Big\} \tag{10.30}$$

are analogies of (3.13), and

$$\begin{aligned}\phi_{ab}(\mathbf{z}) &\equiv \langle\mathbf{z}_a|\hat{D}(-\mathbf{z})|\mathbf{z}_b\rangle \\ &= \exp\Big\{-\tfrac{1}{4}(\mathbf{z}+\mathbf{z}_\Delta)\mathbf{g}_0(\mathbf{z}+\mathbf{z}_\Delta)^\mathsf{T} + i\mathbf{z}\mathbf{j}\mathbf{z}_m^\mathsf{T} + \tfrac{i}{2}\mathbf{z}_a\mathbf{j}\mathbf{z}_b^\mathsf{T}\Big\} \\ &= \langle\mathbf{z}_a|\mathbf{z}_b\rangle\exp\Big\{-\tfrac{1}{4}\mathbf{z}\mathbf{g}_0\mathbf{z}^\mathsf{T} + i\mathbf{z}\mathbf{j}(\mathbf{z}_m^\mathsf{T} - \tfrac{i}{2}\mathbf{j}\mathbf{g}_0\mathbf{z}_\Delta^\mathsf{T})\Big\},\end{aligned} \tag{10.31}$$

and

$$\begin{aligned}\phi_{ba}(\mathsf{z}) &\equiv \langle \mathsf{z}_b|\hat{D}(-\mathsf{z})|\mathsf{z}_a\rangle \\ &= \exp\Big\{-\tfrac{1}{4}(\mathsf{z}-\mathsf{z}_\Delta)\mathsf{g}_0(\mathsf{z}-\mathsf{z}_\Delta)^\top + i\mathsf{z}\mathsf{j}\mathsf{z}_m^\top - \tfrac{i}{2}\mathsf{z}_a\mathsf{j}\mathsf{z}_b^\top\Big\} \\ &= \langle \mathsf{z}_b|\mathsf{z}_a\rangle \exp\Big\{-\tfrac{1}{4}\mathsf{z}\mathsf{g}_0\mathsf{z}^\top + i\mathsf{z}\mathsf{j}(\mathsf{z}_m^\top + \tfrac{i}{2}\mathsf{j}\mathsf{g}_0\mathsf{z}_\Delta^\top)\Big\} \qquad (10.32)\end{aligned}$$

correspond to the interference terms.

Once we get the explicit expression for $\Phi_A(\mathsf{z})$, the characteristic function for the initial state of the Brownian particle, we are ready to derive the time evolution of the reduced characteristic function $\Phi_0(\mathsf{z};t)$ for the Brownian particle. Using the notation

$$\tilde{\mathsf{z}}^\top(t) \equiv \begin{pmatrix}\tilde{x}(t)\\ \tilde{k}(t)\end{pmatrix} = \mathsf{r}_0(t)\mathsf{z}^\top, \qquad (10.33)$$

Eq. (10.11) becomes

$$\Phi_0(\mathsf{z};t) = \Phi_A\Big(\tilde{\mathsf{z}}(t)\Big)\exp\Big\{-\tfrac{1}{2}\mathsf{z}\Theta(t;\beta)\mathsf{z}^\top\Big\}. \qquad (10.34)$$

Substituting (10.28) into (10.34) gives the explicit expression of $\Phi_0(\mathsf{z};t)$. In order to keep track of the interference terms, we express $\Phi_0(\mathsf{z};t)$ in (10.34) as

$$\Phi_0(\mathsf{z};t) = C_A\Big[\Phi_a(\mathsf{z};t) + \Phi_b(\mathsf{z};t) + \Phi_{ab}(\mathsf{z};t) + \Phi_{ba}(\mathsf{z};t)\Big], \qquad (10.35)$$

with

$$\Phi_a(\mathsf{z};t) \equiv \exp\Big\{-\tfrac{1}{4}\mathsf{z}\Big[\mathsf{r}_0^\top(t)\mathsf{g}_0\mathsf{r}_0(t) + 2\Theta(t;\beta)\Big]\mathsf{z}^\top + i\mathsf{z}\mathsf{j}\mathsf{z}_a^\top(t)\Big\}, \qquad (10.36)$$

$$\Phi_b(\mathsf{z};t) \equiv \exp\Big\{-\tfrac{1}{4}\mathsf{z}\Big[\mathsf{r}_0^\top(t)\mathsf{g}_0\mathsf{r}_0(t) + 2\Theta(t;\beta)\Big]\mathsf{z}^\top + i\mathsf{z}\mathsf{j}\mathsf{z}_b^\top(t)\Big\}, \qquad (10.37)$$

$$\Phi_{ab}(\mathsf{z};t) \equiv \langle \mathsf{z}_a|\mathsf{z}_b\rangle \exp\Big\{-\tfrac{1}{4}\mathsf{z}\Big[\mathsf{r}_0^\top(t)\mathsf{g}_0\mathsf{r}_0(t) + 2\Theta(t;\beta)\Big]\mathsf{z}^\top + i\mathsf{z}\mathsf{j}\Big[\mathsf{z}_m^\top(t) - \tfrac{i}{2}\mathsf{j}\mathsf{r}_0^\top(t)\mathsf{g}_0\mathsf{z}_\Delta^\top\Big]\Big\}, \qquad (10.38)$$

$$\Phi_{ba}(\mathsf{z};t) \equiv \langle \mathsf{z}_b|\mathsf{z}_a\rangle \exp\Big\{-\tfrac{1}{4}\mathsf{z}\Big[\mathsf{r}_0^\top(t)\mathsf{g}_0\mathsf{r}_0(t) + 2\Theta(t;\beta)\Big]\mathsf{z}^\top + i\mathsf{z}\mathsf{j}\Big[\mathsf{z}_m^\top(t) + \tfrac{i}{2}\mathsf{j}\mathsf{r}_0^\top(t)\mathsf{g}_0\mathsf{z}_\Delta^\top\Big]\Big\}, \qquad (10.39)$$

where

$$\mathsf{z}_a^{\mathsf{T}}(t) \equiv [\![\mathsf{R}(t)]\!]\mathsf{z}_a^{\mathsf{T}}, \quad \mathsf{z}_b^{\mathsf{T}}(t) \equiv [\![\mathsf{R}(t)]\!]\mathsf{z}_b^{\mathsf{T}}, \tag{10.40}$$

and

$$\mathsf{z}_m^{\mathsf{T}}(t) \equiv [\![\mathsf{R}(t)]\!]\mathsf{z}_m^{\mathsf{T}}, \tag{10.41}$$

i.e., $\mathsf{z}_a(t)$, $\mathsf{z}_b(t)$, and $\mathsf{z}_m(t)$ all follow the restricted phase flow on the Brownian phase plane, with z_a, z_b, and z_m as their initial values, respectively.

Since among those four terms in (10.35), $\Phi_a(\mathsf{z};t)$ and $\Phi_b(\mathsf{z};t)$ correspond to the time evolution of the coherent state $|\mathsf{z}_a\rangle$ and $|\mathsf{z}_b\rangle$, individually. It follows that $[\Phi_{ab}(\mathsf{z};t)+\Phi_{ba}(\mathsf{z};t)]$ corresponds to the interference. Because the characteristic functions have no direct physical meaning, in order to make a quantitative study of this interference we have to transform the characteristic function (10.35) into the Wigner function:

$$W_0(\mathsf{z};t) \equiv C_A\Big[W_a(\mathsf{z};t) + W_b(\mathsf{z};t) + W_{ab}(\mathsf{z};t) + W_{ba}(\mathsf{z};t)\Big], \tag{10.42}$$

with $W_a(\mathsf{z};t)$ being the Wigner function corresponding to the characteristic function $\Phi_a(\mathsf{z};t)$ in (10.35), etc.

Since $\Phi_a(\mathsf{z};t)$ in (10.36) is Gaussian in z, we can use the formulas in Sec. 3.4 to get the corresponding Wigner function:

$$W_a(\mathsf{z};t) = C_1(t;\beta)\exp\Big\{-\Big[\mathsf{z}-\mathsf{z}_a(t)\Big]\mathbf{\Pi}(t;\beta)\Big[\mathsf{z}-\mathsf{z}_a(t)\Big]^{\mathsf{T}}\Big\}, \tag{10.43}$$

where

$$\mathbf{\Pi}(t;\beta) = \mathsf{j}^{\mathsf{T}}\Big[\mathsf{r}_0^{\mathsf{T}}(t)\mathsf{g}_0\mathsf{r}_0(t) + 2\Theta(t;\beta)\Big]^{-1}\mathsf{j}, \tag{10.44}$$

and

$$C_1(t;\beta) = \frac{\sqrt{\det(\mathbf{\Pi}(t;\beta))}}{\pi}. \tag{10.45}$$

Similarly, we have

$$W_b(\mathsf{z};t) = C_1(t;\beta)\exp\Big\{-\Big[\mathsf{z}-\mathsf{z}_b(t)\Big]\mathbf{\Pi}(t;\beta)\Big[\mathsf{z}-\mathsf{z}_b(t)\Big]^{\mathsf{T}}\Big\}, \tag{10.46}$$

and analogously,

$$W_{ab}(\mathsf{z};t) = W^*_{ba}(\mathsf{z};t) \tag{10.47}$$

$$= C_1(t;\beta)\langle \mathsf{z}_a|\mathsf{z}_b\rangle \exp\left\{-\left[\mathsf{z} - \mathsf{z}_m(t) + \tfrac{i}{2}\mathsf{z}_\Delta \mathsf{g}_0 \mathsf{r}_0(t)\mathsf{j}^\top\right]\mathbf{\Pi}(t;\beta)\left[\mathsf{z}^\top - \mathsf{z}_m^\top(t) + \tfrac{i}{2}\mathsf{j}\mathsf{r}_0^\top(t)\mathsf{g}_0\mathsf{z}_\Delta^\top\right]\right\}.$$

Hence we get the explicit form of the Wigner function corresponding to the interference:

$$\begin{aligned} W_{int}(\mathsf{z};t) &\equiv W_{ab}(\mathsf{z};t) + W_{ba}(\mathsf{z};t) = 2\mathrm{Re}\left[W_{ab}(\mathsf{z};t)\right] \\ &= 2C_1(t;\beta)|\langle \mathsf{z}_a|\mathsf{z}_b\rangle| \exp\left\{\tfrac{1}{4}\mathsf{z}_\Delta \mathsf{g}_0 \mathsf{r}_0(t)\mathsf{j}^\top \mathbf{\Pi}(t;\beta)\mathsf{j}\mathsf{r}_0^\top(t)\mathsf{g}_0\mathsf{z}_\Delta^\top\right\} \\ &\quad \exp\left\{-[\mathsf{z} - \mathsf{z}_m(t)]\mathbf{\Pi}(t;\beta)[\mathsf{z} - \mathsf{z}_m(t)]^\top\right\} \\ &\quad \cos\left\{\tfrac{1}{2}\mathsf{z}_a\mathsf{j}\mathsf{z}_b^\top + \mathsf{z}_\Delta \mathsf{g}_0 \mathsf{r}_0(t)\mathsf{j}\mathbf{\Pi}(t;\beta)[\mathsf{z} - \mathsf{z}_m(t)]^\top\right\}. \end{aligned} \tag{10.48}$$

In order to quantitatively analyze the influence of the environment on the interference, we have to define a function which measures the relative strength of the interference term $W_{int}(\mathsf{z};t)$ compared with the direct terms $W_a(\mathsf{z};t)$ and $W_b(\mathsf{z};t)$. Consider the normalized ratio

$$\begin{aligned} \chi(t) &= |\langle \mathsf{z}_a|\mathsf{z}_b\rangle| \exp\left\{\tfrac{1}{4}\mathsf{z}_\Delta \mathsf{g}_0 \mathsf{r}_0(t)\mathsf{j}^\top \mathbf{\Pi}(t;\beta)\mathsf{j}\mathsf{r}_0^\top(t)\mathsf{g}_0\mathsf{z}_\Delta^\top\right\} \\ &= \exp\left\{-\tfrac{1}{4}\mathsf{z}_\Delta[\mathsf{g}_0 - \mathsf{g}_0 \mathsf{r}_0(t)\mathsf{j}^\top \mathbf{\Pi}(t;\beta)\mathsf{j}\mathsf{r}_0^\top(t)\mathsf{g}_0]\mathsf{z}_\Delta^\top\right\}, \end{aligned} \tag{10.49}$$

which is one half the ratio of the upper limit of $W_{int}(\mathsf{z};t)$,

$$2C_1(t;\beta)|\langle \mathsf{z}_a|\mathsf{z}_b\rangle| \exp\left\{\tfrac{1}{4}\mathsf{z}_\Delta \mathsf{g}_0 \mathsf{r}_0(t)\mathsf{j}^\top \mathbf{\Pi}(t;\beta)\mathsf{j}\mathsf{r}_0^\top(t)\mathsf{g}_0\mathsf{z}_\Delta^\top\right\}, \tag{10.50}$$

to the maximum value of $W_a(\mathsf{z};t)$ or $W_a(\mathsf{z};t)$, which is equal to $C_1(t;\beta)$. Eq. (10.50) is only the upper limit instead of the maximum value of $W_{int}(\mathsf{z};t)$ in general because of the cosine term in (10.48). From the quasi-probability interpretation of the Wigner function, we know that this $\chi(t)$ meets the requirement as an indicator of the relative strength of the interference. Note that $\chi(t)$ depends on z_Δ explicitly, and $\chi(0)=1$.

In general $\chi(t)$ is a monotonically decreasing function of t, which indicates the damping of the interference induced by the environment. When $t\to\infty$, we have

$$\chi(\infty) = \exp\left\{-\tfrac{1}{4}\mathsf{z}_\Delta \mathsf{g}_0\mathsf{z}_\Delta^\top\right\} < 1. \tag{10.51}$$

As a comparison, let us consider the same problem for an isolated harmonic oscillator. The corresponding $\chi(t)$ can be obtained by setting $\Theta(t;\beta)\equiv 0$ and

$$\mathsf{r}_0(t) = \begin{pmatrix} \cos(\omega_0 t) & -\sin(\omega_0 t)/(m\omega_0) \\ m\omega_0 \sin(\omega_0 t) & \cos(\omega_0 t) \end{pmatrix} \tag{10.52}$$

in all related formulas. Hence we get $\mathbf{\Pi}(t;\beta) = \mathsf{g}_0$, and $\chi(t) = 1$ for all t in this special case, which means that the interference does not decay if there is no environment coupled to the Brownian particle.

10.5 Quantum Fokker–Planck Equations

In this section we shall derive the equation of motion for the reduced characteristic function $\Phi_0(x,k;t)$, and from it obtain the equation of motion for the corresponding reduced Wigner function $W_0(x,k;t)$. Both equations are usually called the quantum Fokker–Planck equations and are equivalent to the master equation for the reduced density operator of the Brownian particle [10, 44, 45, 48, 79, 96].

It is necessary to emphasize that, the purpose of constructing these quantum Fokker–Planck equations is not to determine the time evolution of the Brownian particle. We have already obtained the time evolution of the reduced characteristic function $\Phi_0(x,k;t)$ in (10.11). The main motivation of this construction is to derive the quantum analogues of the classical Fokker–Planck equations discussed in Sec. 2.6, and from them to determine the quantum version of the diffusion coefficients.

The Fokker–Planck equation (2.43) for the classical characteristic function is a first-order linear partial differential equation. Since all formulas for quantum Brownian motion have classical analogues, we start the derivation of the quantum Fokker–Planck equations by considering the following linear combination of first-order partial derivatives of the reduced characteristic function $\Phi_0(x,k;t)$:

$$L(x,k;t) \equiv \frac{\partial \Phi_0(x,k;t)}{\partial t} + C_x \frac{\partial \Phi_0(x,k;t)}{\partial x} + C_k \frac{\partial \Phi_0(x,k;t)}{\partial k}. \tag{10.53}$$

Using (10.11), we have the explicit expression of the time derivative of $\Phi_0(x,k;t)$:

$$\frac{\partial \Phi_0(x,k;t)}{\partial t} = \Phi_A\Big(\tilde{x}(t),\tilde{k}(t)\Big)\frac{\partial}{\partial t}\exp\left\{-\frac{1}{2}\Big(x,k\Big)\Theta(t;\beta)\begin{pmatrix} x \\ k \end{pmatrix}\right\} \tag{10.54}$$

$$+ \frac{\partial \Phi_A\big(\tilde{x}(t), \tilde{k}(t)\big)}{\partial t} \exp\left\{-\frac{1}{2}\big(x,k\big)\Theta(t;\beta)\begin{pmatrix} x \\ k \end{pmatrix}\right\}$$

$$= \Phi_0(x,k;t)\left[-\frac{1}{2}\big(x,k\big)\dot{\Theta}(t;\beta)\begin{pmatrix} x \\ k \end{pmatrix}\right]$$

$$+ \left(\frac{\partial \Phi_A\big(\tilde{x}(t), \tilde{k}(t)\big)}{\partial \tilde{x}(t)}, \frac{\partial \Phi_A\big(\tilde{x}(t), \tilde{k}(t)\big)}{\partial \tilde{k}(t)}\right) \frac{\partial}{\partial t}\begin{pmatrix} \tilde{x}(t) \\ \tilde{k}(t) \end{pmatrix} \exp\left\{-\frac{1}{2}\big(x,k\big)\Theta(t;\beta)\begin{pmatrix} x \\ k \end{pmatrix}\right\}$$

$$= \Phi_0(x,k;t)\left[-\frac{1}{2}\big(x,k\big)\dot{\Theta}(t;\beta)\begin{pmatrix} x \\ k \end{pmatrix}\right]$$

$$+ \left(\frac{\partial \Phi_A\big(\tilde{x}(t), \tilde{k}(t)\big)}{\partial \tilde{x}(t)}, \frac{\partial \Phi_A\big(\tilde{x}(t), \tilde{k}(t)\big)}{\partial \tilde{k}(t)}\right) \dot{\mathsf{r}}_0(t)\begin{pmatrix} x \\ k \end{pmatrix} \exp\left\{-\frac{1}{2}\big(x,k\big)\Theta(t;\beta)\begin{pmatrix} x \\ k \end{pmatrix}\right\}.$$

Similarly, we have

$$\frac{\partial \Phi_0(x,k;t)}{\partial x} = \Phi_0(x,k;t)\left[-\big(x,k\big)\Theta(t;\beta)\begin{pmatrix} 1 \\ 0 \end{pmatrix}\right] \tag{10.55}$$

$$+ \left(\frac{\partial \Phi_A\big(\tilde{x}(t), \tilde{k}(t)\big)}{\partial \tilde{x}(t)}, \frac{\partial \Phi_A\big(\tilde{x}(t), \tilde{k}(t)\big)}{\partial \tilde{k}(t)}\right) \mathsf{r}_0(t)\begin{pmatrix} 1 \\ 0 \end{pmatrix} \exp\left\{-\frac{1}{2}\big(x,k\big)\Theta(t;\beta)\begin{pmatrix} x \\ k \end{pmatrix}\right\},$$

and

$$\frac{\partial \Phi_0(x,k;t)}{\partial k} = \Phi_0(x,k;t)\left[-\big(x,k\big)\Theta(t;\beta)\begin{pmatrix} 0 \\ 1 \end{pmatrix}\right] \tag{10.56}$$

$$+ \left(\frac{\partial \Phi_A\big(\tilde{x}(t), \tilde{k}(t)\big)}{\partial \tilde{x}(t)}, \frac{\partial \Phi_A\big(\tilde{x}(t), \tilde{k}(t)\big)}{\partial \tilde{k}(t)}\right) \mathsf{r}_0(t)\begin{pmatrix} 0 \\ 1 \end{pmatrix} \exp\left\{-\frac{1}{2}\big(x,k\big)\Theta(t;\beta)\begin{pmatrix} x \\ k \end{pmatrix}\right\},$$

with $\mathsf{r}_0(t)$ defined by (9.5). Note that the above three expressions are expressed in terms of matrix multiplications. Substituting (10.54)–(10.56) into (10.53), we get

$$L(x,k;t) = -\Phi_0(x,k;t)\left[\frac{1}{2}\big(x,k\big)\dot{\Theta}(t;\beta)\begin{pmatrix} x \\ k \end{pmatrix} + \big(x,k\big)\Theta(t;\beta)\begin{pmatrix} C_x \\ C_k \end{pmatrix}\right]$$

$$+ \left(\frac{\partial \Phi_A\big(\tilde{x}(t), \tilde{k}(t)\big)}{\partial \tilde{x}(t)}, \frac{\partial \Phi_A\big(\tilde{x}(t), \tilde{k}(t)\big)}{\partial \tilde{k}(t)}\right)\left[\dot{\mathsf{r}}_0(t)\begin{pmatrix} x \\ k \end{pmatrix} + \mathsf{r}_0(t)\begin{pmatrix} C_x \\ C_k \end{pmatrix}\right]$$

$$\times \exp\left\{-\frac{1}{2}\big(x,k\big)\Theta(t;\beta)\begin{pmatrix} x \\ k \end{pmatrix}\right\}. \tag{10.57}$$

Noticing that on the right hand side of the above equation, there are two terms

$$\frac{\partial \Phi_A\big(\tilde{x}(t), \tilde{k}(t)\big)}{\partial \tilde{x}(t)} \quad \text{and} \quad \frac{\partial \Phi_A\big(\tilde{x}(t), \tilde{k}(t)\big)}{\partial \tilde{k}(t)} \tag{10.58}$$

which are not functionals of $\Phi_0(x,k;t)$. Since $\Phi_A(x,k)$ is an arbitrary function, we cannot make any further simplification or transformation on the above two derivatives. Therefore in order to construct a linear partial differential equation for $\Phi_0(x,k;t)$ from (10.57), we must demand that

$$\dot{\mathsf{r}}_0(t)\begin{pmatrix} x \\ k \end{pmatrix} + \mathsf{r}_0(t)\begin{pmatrix} C_x \\ C_k \end{pmatrix} = 0, \tag{10.59}$$

such that both terms in (10.58) disappear from (10.57). The coefficients C_x and C_k are then determined as

$$\begin{pmatrix} C_x \\ C_k \end{pmatrix} = -\mathsf{r}_0^{-1}(t)\dot{\mathsf{r}}_0(t)\begin{pmatrix} x \\ k \end{pmatrix} \equiv \Lambda(t)\begin{pmatrix} x \\ k \end{pmatrix}, \tag{10.60}$$

where $\Lambda(t)$ is a 2×2 matrix with the elements:

$$\Lambda_{11}(t) = \frac{\dot{u}\ddot{u} - u\,\dddot{u}}{u\ddot{u} - \dot{u}^2}, \tag{10.61}$$

$$\Lambda_{12}(t) = \frac{1}{m}, \tag{10.62}$$

$$\Lambda_{21}(t) = m\left(\frac{\ddot{u}^2 - \dot{u}\,\dddot{u}}{u\ddot{u} - \dot{u}^2}\right), \tag{10.63}$$

$$\Lambda_{22}(t) = 0. \tag{10.64}$$

Substituting (10.60) into (10.57), we have

$$L(x,k;t) = -\Phi_0(x,k;t)\big(x,k\big)\left[\frac{\dot{\Theta}(t;\beta)}{2} + \Theta(t;\beta)\Lambda(t)\right]\begin{pmatrix} x \\ k \end{pmatrix}. \tag{10.65}$$

Rearranging (10.65) and using (10.62) and (10.64), Eq. (10.65) becomes

$$\left[\frac{\partial}{\partial t} + \left(\frac{k}{m} + \Lambda_{11}(t)x\right)\frac{\partial}{\partial x} + \Lambda_{21}(t)x\frac{\partial}{\partial k} + D_{kk}(t;\beta)x^2 + D_{xk}(t;\beta)xk\right]\Phi_0(x,k;t) = 0, \tag{10.66}$$

where

$$D_{kk}(t;\beta) \equiv \frac{\dot{\Theta}_{11}(t;\beta)}{2} + \Lambda_{11}(t)\Theta_{11}(t;\beta) + \Lambda_{21}(t)\Theta_{12}(t;\beta), \tag{10.67}$$

and

$$D_{xk}(t;\beta) \equiv \dot{\Theta}_{12}(t;\beta) + \frac{\Theta_{11}(t;\beta)}{m} + \Lambda_{11}(t)\Theta_{12}(t;\beta) + \Lambda_{21}(t)\Theta_{22}(t;\beta). \qquad (10.68)$$

Eq. (10.66) is the quantum Fokker–Planck equation for the reduced characteristic function corresponding to the Brownian particle [96], which can be taken as the c-number representation for the master equation of the reduced density operator. Note that in (10.66) the coefficient of the term $k^2\Phi_0(x,k;t)$ vanishes because of the relation (10.10).

From the expressions (10.8)–(10.10), we see that in general the elements in $\Theta(t;\beta)$, hence $D_{kk}(t;\beta)$ and $D_{xk}(t;\beta)$, depend on the history of the Brownian particle. Thus in general the solution of the quantum Fokker–Planck equation (10.66) corresponds to a non-Markovian process.

Eq. (10.66) can be easily transformed into the quantum Fokker–Planck equation for the reduced Wigner function $W_0(x,k;t)$. As discussed in Chap. 3, the Wigner function and characteristic function are symplectic Fourier transforms to each other, hence we have the following correspondence:

$$\left(x\frac{\partial}{\partial k}, k\frac{\partial}{\partial x}, -\frac{\partial}{\partial k}k, -\frac{\partial^2}{\partial k^2}, -\frac{\partial^2}{\partial x^2}, \frac{\partial^2}{\partial x \partial k}\right) W(x,k;t)$$
$$\Longleftrightarrow \left(x\frac{\partial}{\partial k}, k\frac{\partial}{\partial x}, x\frac{\partial}{\partial x}, x^2, k^2, xk\right)\Phi(x,k;t). \qquad (10.69)$$

From this correspondence, the quantum Fokker–Planck equation for the reduced Wigner function $W_0(x,k;t)$ corresponding to (10.66) follows as [44, 45, 48, 79, 96]

$$\left[\frac{\partial}{\partial t} + \frac{k}{m}\frac{\partial}{\partial x} + \frac{\partial}{\partial k}\Big(\Lambda_{21}(t)x - \Lambda_{11}(t)k\Big) - D_{kk}(t;\beta)\frac{\partial^2}{\partial k^2} + D_{xk}(t;\beta)\frac{\partial^2}{\partial x \partial k}\right] W_0(x,k;t) = 0. \qquad (10.70)$$

The corresponding equation of motion for the coordinate representation $\varrho(x,y;t)$ of the reduced density operator [48] can also be obtained from (10.66) by a similar method. Both (10.66) and (10.70) are mathematically equivalent to the quantum Langevin equation discussed in Chap. 8.

In the following, we shall calculate the explicit expression of (10.70) for ohmic dissipation with infinite cutoff frequency. From (8.33), we see that in this case the fundamental solution $u(t)$ satisfies the following second-order differential equation:

$$\ddot{u}(t) + \gamma\dot{u}(t) + \omega_\Omega^2(t)u(t) = 0, \qquad (10.71)$$

where

$$\omega_\Omega^2(t) \equiv \omega_0^2 + 2\gamma\delta(t). \tag{10.72}$$

The matrix $\Lambda(t)$ follows as

$$\Lambda(t) = \begin{pmatrix} \gamma & m^{-1} \\ -m\omega_\Omega^2(t) & 0 \end{pmatrix}. \tag{10.73}$$

Substituting (10.73) into (10.70), we get the quantum Fokker–Planck equation for the Wigner function of a harmonically bound Brownian particle coupled to ohmic heat bath with infinite cutoff frequency:

$$\left[\frac{\partial}{\partial t} + \frac{k}{m}\frac{\partial}{\partial x} - \frac{\partial}{\partial k}\Big(m\omega_\Omega^2(t)x + \gamma k\Big) - D_{kk}(t;\beta)\frac{\partial^2}{\partial k^2} + D_{xk}(t;\beta)\frac{\partial^2}{\partial x \partial k}\right] W_0(x,k;t) = 0. \tag{10.74}$$

To calculate the coefficients $D_{kk}(t;\beta)$ and $D_{xk}(t;\beta)$, we first need to use integration by parts to express $\dot{\Theta}_{11}(t;\beta)$ and $\dot{\Theta}_{12}(t;\beta)$ as follows:

$$\begin{aligned} &\dot{\Theta}_{11}(t;\beta) \qquad (10.75)\\ &= 2m^2 \int_0^t d\tau\, \dot{u}(\tau)\dot{u}(t)K(t-\tau;\beta) \\ &= 2m^2 \int_0^t\int_0^t d\tau_1 d\tau_2\, \ddot{u}(\tau_1)\dot{u}(\tau_2)K(\tau_1-\tau_2;\beta) + 2m\int_0^t d\tau\, \dot{u}(\tau)K(\tau;\beta), \end{aligned}$$

$$\begin{aligned} &\dot{\Theta}_{12}(t;\beta) \qquad (10.76)\\ &= -m\int_0^t d\tau\, u(\tau)\dot{u}(t)K(t-\tau;\beta) - m\int_0^t d\tau\, \dot{u}(\tau)u(t)K(t-\tau;\beta) \\ &= -m\int_0^t\int_0^t d\tau_1 d\tau_2 \Big[\ddot{u}(\tau_1)u(\tau_2) + \dot{u}(\tau_1)\dot{u}(\tau_2)\Big]K(\tau_1-\tau_2;\beta) - \int_0^t d\tau\, u(\tau)K(\tau;\beta). \end{aligned}$$

Substituting (10.8)–(10.10), (10.73), (10.75), and (10.76) into (10.67) and (10.68), and using (10.71), we get

$$D_{kk}(t;\beta) = m\int_0^t d\tau\, \dot{u}(\tau)K(\tau;\beta), \tag{10.77}$$

and

$$D_{xk}(t;\beta) = -\int_0^t d\tau\, u(\tau)K(\tau;\beta). \tag{10.78}$$

In the classical limit with $K(t;\beta)$ given by (8.38), we have from the initial conditions (6.31):

$$D_{kk}(t;\beta) = \frac{m\gamma}{\beta} = D_k, \tag{10.79}$$

$$D_{xk}(t;\beta) = 0, \tag{10.80}$$

and (10.74) becomes [10]

$$\left[\frac{\partial}{\partial t} + \frac{k}{m}\frac{\partial}{\partial x} - \frac{\partial}{\partial k}\Big(m\omega_\Omega^2(t)x + \gamma k\Big) - D_k\frac{\partial^2}{\partial k^2}\right]W_0(x,k;t) = 0, \tag{10.81}$$

which is the quantum analogue of the classical Fokker–Planck equation (2.41). Obviously, the solutions of (10.81) correspond to Markovian processes.

Chapter 11

Non-factorizable Initial States

In the previous chapter we have discussed in detail the time evolution of a Brownian particle with respect to the factorizable initial states, which is based on the assumption that there is no initial correlation between the Brownian particle and the heat bath, and the interaction between them is switched on only after $t > 0$. The simplicity of these kind of initial states allows us to derive many explicit results. Unfortunately, such naive and simplified initial states are not realized in most applications. Initial states of a Brownian particle which can be prepared in the laboratory are those non-factorizable states called perturbed thermal states. These non-factorizable initial states have been discussed by several authors in the literature [16, 40, 80, 85]. In this chapter we shall use the characteristic function to calculate the time evolution of the Brownian particle with respect to these non-factorizable initial states.

11.1 Perturbed Thermal State: General Formulation

The perturbed thermal state of the total system described by the Hamiltonian (6.1) is defined as

$$\hat{\varrho}^{\beta}_{ab} = C^{\beta}_{ab}\hat{a}\hat{\varrho}_{\beta}\hat{b}, \tag{11.1}$$

where $\hat{\varrho}_{\beta}$ is the canonical density operator of the model thermal state defined in Chap. 7, $\hat{a}=\hat{a}(\hat{q},\hat{p})$ and $\hat{b}=\hat{b}(\hat{q},\hat{p})$ are two operators which only act on the Brownian particle, and

$$C^{\beta}_{ab} \equiv \frac{1}{Tr\left(\hat{a}\hat{\varrho}_{\beta}\hat{b}\right)} \tag{11.2}$$

is the normalization constant. The operators $\hat{a}$ and $\hat{b}$ must satisfy certain conditions in order to guarantee that the perturbed thermal state (11.1) is a legitimate density operator. In this section, we shall derive the general formulation for the time evolution of a Brownian particle with respect to the initial state (11.1).

According to Chap. 9, we have first to obtain the explicit form of the initial characteristic function corresponding to (11.1). Using (3.12), we have

$$\begin{aligned}\Phi_{ini}(z) &= Tr\Big[\hat{\varrho}^{\beta}_{ab}\hat{D}(-z)\Big] \\ &= C^{\beta}_{ab}Tr\Big[\hat{a}\hat{\varrho}_{\beta}\hat{b}\hat{D}(-z)\Big].\end{aligned} \tag{11.3}$$

In order to get an explicit expression for $\Phi_{ini}(z)$, we need to resort to the characteristic symbols defined in Sec. 4.2. According to (4.9) and (4.12), the operators $\hat{a}$, $\hat{b}$, and $\hat{\varrho}_{\beta}$ can be expressed as

$$\hat{a} = \int_{-\infty}^{+\infty} d^{2N}z a(z)\hat{D}(z), \tag{11.4}$$

$$\hat{b} = \int_{-\infty}^{+\infty} d^{2N}z b(z)\hat{D}(z), \tag{11.5}$$

and

$$\hat{\varrho}_{\beta} = (2\pi)^{-N}\int_{-\infty}^{+\infty} d^{2N}z \Phi_{\beta}(z)\hat{D}(z), \tag{11.6}$$

where $a(z)$ and $b(z)$ are the characteristic symbols of the operators $\hat{a}$ and $\hat{b}$, respectively, and $\Phi_{\beta}(z)$ is the characteristic function corresponding to $\hat{\varrho}_{\beta}$ which is defined by (7.40). Substituting the above three representations into (11.3), it follows that

$$\begin{aligned}\Phi_{ini}(z) = (2\pi)^{-N}C^{\beta}_{ab}\int_{-\infty}^{+\infty} d^{2N}z_a d^{2N}z_b d^{2N}z_{\beta} a(z_a)b(z_b)\Phi_{\beta}(z_{\beta}) \\ tr\Big[\hat{D}(z_a)\hat{D}(z_{\beta})\hat{D}(z_b)\hat{D}(-z)\Big].\end{aligned} \tag{11.7}$$

Note that the trace in (11.3) has been replaced by the equivalent pseudo-trace in (11.7) since the product of the Weyl operators is not in the trace class. Using the formulas in

Secs. 1.3.1 and 1.3.3, the pseudo-trace in the above integrand can be evaluated as

$$tr\Big[\hat{D}(z_a)\hat{D}(z_\beta)\hat{D}(z_b)\hat{D}(-z)\Big]$$
$$= (2\pi)^N\delta(z_a+z_b+z_\beta-z)\exp\Big\{\tfrac{i}{2}z\mathsf{J}(z_a-z_b)^\mathsf{T}+\tfrac{i}{2}z_a\mathsf{J}z_b^\mathsf{T}\Big\}, \tag{11.8}$$

hence (11.7) reduces to

$$\Phi_{ini}(z) = C^\beta_{ab}\int_{-\infty}^{+\infty} d^{2N}z_a\, d^{2N}z_b\, a(z_a)b(z_b)\Phi_\beta(z-z_a-z_b)$$
$$\exp\Big\{\tfrac{i}{2}z\mathsf{J}(z_a-z_b)^\mathsf{T}+\tfrac{i}{2}z_a\mathsf{J}z_b^\mathsf{T}\Big\}. \tag{11.9}$$

Substituting (11.9) into (9.1) and using (7.40), we get the time evolution of the reduced characteristic function for the Brownian particle:

$$\Phi_0(x,k;t) = \Phi_{ini}\Big(\tilde{z}(t)\Big) \tag{11.10}$$
$$= C^\beta_{ab}\int_{-\infty}^{+\infty} d^{2N}z_a\, d^{2N}z_b\, a(z_a)b(z_b)\Phi_\beta\Big(\tilde{z}(t)-z_a-z_b\Big)$$
$$\exp\Big\{\tfrac{i}{2}\tilde{z}(t)\mathsf{J}(z_a-z_b)^\mathsf{T}+\tfrac{i}{2}z_a\mathsf{J}z_b^\mathsf{T}\Big\}$$
$$= \exp\Big\{-\tfrac{1}{2}(x,\mathbf{0},k,\mathbf{0})\mathsf{J}^\mathsf{T}\Sigma_\beta\mathsf{J}(x,\mathbf{0},k,\mathbf{0})^\mathsf{T}\Big\}$$
$$C^\beta_{ab}\int_{-\infty}^{+\infty} d^{2N}z_a\, d^{2N}z_b\, a(z_a)b(z_b)\exp\Big\{\tfrac{i}{2}z_a\mathsf{J}z_b^\mathsf{T}-\tfrac{1}{2}(z_a+z_b)\mathsf{J}^\mathsf{T}\Sigma_\beta\mathsf{J}(z_a+z_b)^\mathsf{T}\Big\}$$
$$\exp\Big\{(x,\mathbf{0},k,\mathbf{0})\mathsf{J}^\mathsf{T}\mathsf{S}_\beta(t)\mathsf{J}(z_a+z_b)^\mathsf{T}+\tfrac{i}{2}(x,\mathbf{0},k,\mathbf{0})\mathsf{J}\mathsf{R}(t)(z_a-z_b)^\mathsf{T}\Big\},$$

where $\tilde{z}(t)$ is defined as in (9.2), and we have used (7.15) and $\mathsf{S}_\beta(t)=\mathsf{R}(t)\Sigma_\beta$ in simplifying (11.10).

Since both $\hat{a}$ and $\hat{b}$ are one-mode operators which only act on the Brownian particle, according to the discussion in Sec. 4.2 the characteristic symbols $a(z)$ and $b(z)$ can be specified as

$$a(z) = a_0(x,k)\prod_\ell \delta(x_\ell)\delta(k_\ell), \tag{11.11}$$

$$b(z) = b_0(x,k)\prod_\ell \delta(x_\ell)\delta(k_\ell). \tag{11.12}$$

Therefore we can further simplify $\Phi_0(x,k;t)$ into

$$\Phi_0(x,k;t) = \exp\left\{-\frac{1}{2}\big(x,k\big)\mathsf{j}^{\mathsf{T}}\llbracket\Sigma_\beta\rrbracket\mathsf{j}\begin{pmatrix}x\\k\end{pmatrix}\right\} \tag{11.13}$$

$$C^\beta_{ab}\int_{-\infty}^{+\infty} dx_a dk_a dx_b dk_b \Psi^\beta_{ab}(x_a,x_b,k_a,k_b)$$

$$\exp\left\{\big(x,k\big)\left[\mathsf{j}^{\mathsf{T}}\llbracket\mathsf{S}_\beta(t)\rrbracket\mathsf{j}\begin{pmatrix}x_a+x_b\\k_a+k_b\end{pmatrix}+\frac{i}{2}\mathsf{j}\llbracket\mathsf{R}(t)\rrbracket\begin{pmatrix}x_a-x_b\\k_a-k_b\end{pmatrix}\right]\right\},$$

where

$$\Psi^\beta_{ab}(x_a,x_b,k_a,k_b) \equiv a_0(x_a,k_a)b_0(x_b,k_b) \tag{11.14}$$

$$\exp\left\{\frac{i}{2}\big(x_a,k_a\big)\mathsf{j}\begin{pmatrix}x_b\\k_b\end{pmatrix}-\frac{1}{2}\big(x_a+x_b,k_a+k_b\big)\mathsf{j}^{\mathsf{T}}\llbracket\Sigma_\beta\rrbracket\mathsf{j}\begin{pmatrix}x_a+x_b\\k_a+k_b\end{pmatrix}\right\},$$

and $\llbracket\mathsf{R}(t)\rrbracket$, $\llbracket\mathsf{S}_\beta(t)\rrbracket$, and $\llbracket\Sigma_\beta\rrbracket$ are defined by (7.12), (7.27), and (7.42), respectively. Note that the first line of (11.13) is the characteristic function of the thermal equilibrium state for the Brownian particle given by (7.41).

Finally, the easiest way to determine the normalization constant C^β_{ab} is to impose the normalization condition on (11.13):

$$\Phi_0(0,0;t) = C^\beta_{ab}\int_{-\infty}^{+\infty} dx_a dx_b dk_a dk_b \Psi^\beta_{ab}(x_a,x_b,k_a,k_b) = 1. \tag{11.15}$$

In summary, Eq. (11.13), together with (11.14) and (11.15), describe the time evolution of a Brownian particle with the perturbed thermal state (11.1) as the initial state. Note that in (11.13), unlike in (10.11), the spectral density $\rho(\omega)$ of the heat bath does not appear explicitly, which means that all the results derived from (11.13) are independent of the cutoff frequency. The time evolution of the mean vector and the covariance matrix corresponding to (11.13) can be calculated via (4.19)–(4.23).

When $t\to\infty$, according to the Riemann–Lebesgue Lemma:

$$\lim_{t\to\infty}\llbracket\mathsf{R}(t)\rrbracket = \mathbf{0}, \quad \text{and} \quad \lim_{t\to\infty}\llbracket\mathsf{S}_\beta(t)\rrbracket = \mathbf{0}. \tag{11.16}$$

Applying the above results to (11.13) and using (11.15), we find that

$$\lim_{t\to\infty}\Phi_0(x,k;t) = \exp\left\{-\frac{1}{2}\big(x,k\big)\mathsf{j}^{\mathsf{T}}\llbracket\Sigma_\beta\rrbracket\mathsf{j}\begin{pmatrix}x\\k\end{pmatrix}\right\}, \tag{11.17}$$

which means that with an arbitrary perturbed thermal state as the initial state, the state of the Brownian particle always approaches the thermal equilibrium state corresponding to (7.41) as $t \to \infty$.

The above formulation can be trivially generalized to the the most general perturbed thermal state, which is a linear combination of several $\hat{\varrho}_{ab}^{\beta}$'s defined in (11.1) with the same $\hat{\varrho}_{\beta}$ but different $\hat{a}$'s and $\hat{b}$'s [40].

11.2 Localized Thermal State

In this section we shall consider a practical example of the perturbed thermal state called the localized thermal state. It is prepared by filtering the ensemble of the Brownian particle, which is originally in thermal equilibrium with the heat bath, through a Gaussian slit represented by the operator [40, 85]

$$\begin{aligned}\hat{P}(x_c;\sigma_0) &= \left(\frac{1}{2\pi\sigma_0}\right)^{1/4}\int_{-\infty}^{+\infty} dx \exp\left\{-\frac{1}{4\sigma_0}(x-x_c)^2\right\}|x\rangle\langle x| \\ &= \left(\frac{1}{2\pi\sigma_0}\right)^{1/4}\exp\left\{-\frac{1}{4\sigma_0}(\hat{q}-x_c)^2\right\}, \end{aligned} \tag{11.18}$$

where x and $\hat{q}$ correspond to the position of the Brownian particle, x_c is the center and σ_0 is the variance of the filter. Note that σ_0 cannot be arbitrarily small due to the uncertainty principle. According to the definition in the last section, this initial state is the perturbed thermal state (11.1) with

$$\hat{a} = \hat{b} = \hat{P}(x_c;\sigma_0). \tag{11.19}$$

From the Weyl correspondence rule discussed in Sec. 4.1, we know that the Weyl symbol of the operator $\hat{P}(x_c;\sigma_0)$ is

$$\left(\frac{1}{2\pi\sigma_0}\right)^{1/4}\exp\left\{-\frac{1}{4\sigma_0}(x-x_c)^2\right\}. \tag{11.20}$$

It follows that the characteristic symbols $a_0(x,k)$ in (11.11) and $b_0(x,k)$ in (11.12) take the form

$$a_0(x,k) = b_0(x,k) = C_0\delta(x)\exp\left\{-\sigma_0 k^2 - ix_c k\right\}, \tag{11.21}$$

where

$$C_0 \equiv \left(\frac{\sigma_0}{2\pi^3}\right)^{1/4}. \tag{11.22}$$

Substituting the above results into (11.13) gives

$$\begin{aligned}
&\Phi_0(x,k;t) \qquad (11.23)\\
&= \exp\left\{-\frac{1}{2}\big(x,k\big)\mathsf{j}^{\mathsf{T}}[\![\Sigma_\beta]\!]\mathsf{j}\begin{pmatrix}x\\k\end{pmatrix}\right\}\\
&\quad C_0^2 C_{ab}^{\beta}\int_{-\infty}^{+\infty} dk_a dk_b \exp\left\{-\sigma_0(k_a^2+k_b^2) - ix_c(k_a+k_b) - \tfrac{1}{2}\sigma_{qq}[\beta](k_a+k_b)^2\right\}\\
&\quad \exp\left\{[-m\dot{v}(t;\beta)x + v(t;\beta)k](k_a+k_b) + \tfrac{i}{2}[m\dot{u}(t)x - u(t)k](k_a-k_b)\right\}\\
&\equiv \exp\left\{-\frac{1}{2}\big(x,k\big)\mathsf{j}^{\mathsf{T}}[\![\Sigma_\beta]\!]\mathsf{j}\begin{pmatrix}x\\k\end{pmatrix}\right\}\\
&\quad C_0^2 C_{ab}^{\beta}\int_{-\infty}^{+\infty} dk_a dk_b \exp\left\{-\frac{1}{2}\big(k_a,k_b\big)\mathsf{A}\begin{pmatrix}k_a\\k_b\end{pmatrix} + \big(k_a,k_b\big)\left[\mathsf{B}(t)\begin{pmatrix}x\\k\end{pmatrix} + \mathsf{d}\right]\right\},
\end{aligned}$$

where

$$\mathsf{A} = 2\sigma_0\begin{pmatrix}1&0\\0&1\end{pmatrix} + \sigma_{qq}[\beta]\begin{pmatrix}1&1\\1&1\end{pmatrix}, \tag{11.24}$$

$$\mathsf{B}(t) = -m\dot{v}(t;\beta)\begin{pmatrix}1&0\\1&0\end{pmatrix} + v(t;\beta)\begin{pmatrix}0&1\\0&1\end{pmatrix} + \tfrac{i}{2}m\dot{u}(t)\begin{pmatrix}1&0\\-1&0\end{pmatrix} + \tfrac{i}{2}u(t)\begin{pmatrix}0&-1\\0&1\end{pmatrix}, \tag{11.25}$$

and

$$\mathsf{d} = -ix_c\begin{pmatrix}1\\1\end{pmatrix}. \tag{11.26}$$

After performing the double Gaussian integrals in (11.23), we get

$$\Phi_0(x,k;t) = \exp\left\{-\frac{1}{2}\big(x,k\big)\left[\mathsf{j}^{\mathsf{T}}[\![\Sigma_\beta]\!]\mathsf{j} - \mathsf{B}^{\mathsf{T}}(t)\mathsf{A}^{-1}\mathsf{B}(t)\right]\begin{pmatrix}x\\k\end{pmatrix} + \big(x,k\big)\mathsf{B}^{\mathsf{T}}(t)\mathsf{A}^{-1}\mathsf{d}\right\}, \tag{11.27}$$

where

$$\mathsf{A}^{-1} = \frac{1}{4\sigma_0(\sigma_0+\sigma_{qq}[\beta])}\left[\big(2\sigma_0+\sigma_{qq}[\beta]\big)\begin{pmatrix}1&0\\0&1\end{pmatrix} - \sigma_{qq}[\beta]\begin{pmatrix}0&1\\1&0\end{pmatrix}\right], \tag{11.28}$$

hence

$$\mathsf{B}^{\mathsf{T}}(t)\mathsf{A}^{-1}\mathsf{B}(t) = \frac{1}{\sigma_0 + \sigma_{qq}[\beta]} \begin{pmatrix} m^2\dot{v}(t;\beta)^2 & -mv(t;\beta)\dot{v}(t;\beta) \\ -mv(t;\beta)\dot{v}(t;\beta) & v(t;\beta)^2 \end{pmatrix}$$

$$-\frac{1}{4\sigma_0} \begin{pmatrix} m^2\dot{u}(t)^2 & -mu(t)\dot{u}(t) \\ -mu(t)\dot{u}(t) & u(t)^2 \end{pmatrix}, \tag{11.29}$$

and

$$\mathsf{B}^{\mathsf{T}}(t)\mathsf{A}^{-1}\mathsf{d} = \frac{ix_c}{\sigma_0 + \sigma_{qq}[\beta]} \begin{pmatrix} m\dot{v}(t;\beta) \\ -v(t;\beta) \end{pmatrix}. \tag{11.30}$$

From (11.27), we find that the time evolution of the mean vector is

$$\begin{pmatrix} x(t) \\ k(t) \end{pmatrix} = \frac{x_c}{\sigma_0 + \sigma_{qq}[\beta]} \begin{pmatrix} v(t;\beta) \\ m\dot{v}(t;\beta) \end{pmatrix}, \tag{11.31}$$

with the initial value

$$\begin{pmatrix} x(0) \\ k(0) \end{pmatrix} = \frac{\sigma_{qq}[\beta]x_c}{\sigma_0 + \sigma_{qq}[\beta]} \begin{pmatrix} 1 \\ 0 \end{pmatrix}, \tag{11.32}$$

and the time evolution of the variances are

$$\sigma_{qq}(t) = \sigma_{qq}[\beta] - \frac{v(t;\beta)^2}{\sigma_0 + \sigma_{qq}[\beta]} + \frac{u(t)^2}{4\sigma_0}, \tag{11.33}$$

and

$$\sigma_{pp}(t) = \sigma_{pp}[\beta] - \frac{m^2\dot{v}(t;\beta)^2}{\sigma_0 + \sigma_{qq}[\beta]} + \frac{m^2\dot{u}(t)^2}{4\sigma_0}. \tag{11.34}$$

Note that $v(0;\beta) = \sigma_{qq}[\beta]$. It is interesting to notice that at $t=0$, the filtering operation changes the original variances $\sigma_{qq}[\beta]$ and $\sigma_{pp}[\beta]$ into

$$\sigma_{qq}(0) = \frac{\sigma_0\sigma_{qq}[\beta]}{\sigma_0 + \sigma_{qq}[\beta]}, \tag{11.35}$$

which is the harmonic mean of σ_0 and $\sigma_{qq}[\beta]$, and

$$\sigma_{pp}(0) = \sigma_{qq}[\beta] + \frac{1}{4\sigma_0}. \tag{11.36}$$

When $t \to \infty$, it is obvious that this state approaches the thermal equilibrium state, as discussed in the last section.

11.3 Thermal Squeezed Coherent State

As another example of the non-factorizable initial state, we consider the thermal squeezed coherent state of the Brownian particle [40, 80]. Although it is a special case of the perturbed thermal state (11.1), because of the symplectic symmetry it is easier to first derive the time evolution of the total system, then perform the reduction to get the time evolution of the Brownian particle.

Let us first briefly discuss the general multimode thermal squeezed coherent state constructed from the thermal state of the total system, which is defined as a quantum state corresponding to the density operator

$$\hat{\mathcal{U}}_{DS}\hat{\varrho}_{\beta}\hat{\mathcal{U}}_{DS}^{\dagger}, \tag{11.37}$$

where

$$\hat{\mathcal{U}}_{DS} \equiv \hat{D}(\boldsymbol{z}_c)\hat{S}(\mathsf{Q}) \tag{11.38}$$

is the same operator for constructing the ordinary squeezed coherent state (1.37), with

$$\mathsf{Q} \equiv \mathbf{g}^{-\frac{1}{2}}\exp(\mathsf{m}\mathsf{p})\mathbf{g}^{\frac{1}{2}} \in \mathrm{Sp}(2N, \mathbf{R}). \tag{11.39}$$

In order to construct the thermal squeezed coherent state for the Brownian particle, we define the one-mode analogue of Q in (11.39) as

$$\mathsf{Q}_0 = \mathbf{g}_0^{-\frac{1}{2}}\begin{pmatrix} a & e \\ e & d \end{pmatrix}\mathbf{g}_0^{\frac{1}{2}} \equiv \begin{pmatrix} a & b \\ c & d \end{pmatrix}, \tag{11.40}$$

where

$$\begin{pmatrix} a & e \\ e & d \end{pmatrix} \tag{11.41}$$

is a positive definite and symmetric symplectic matrix, hence the elements in Q_0 satisfies

$$ad - bc = 1, \quad \text{and} \quad a, d > 0. \tag{11.42}$$

The inverse of Q_0 follows as

$$\mathsf{Q}_0^{-1} = \begin{pmatrix} d & -b \\ -c & a \end{pmatrix}. \tag{11.43}$$

The thermal squeezed coherent state for the Brownian particle can be defined as a special case of the general (11.37) with $\hat{\mathcal{U}}_{DS}$ only acting on the Brownian particle, i.e., with the $\hat{\mathcal{U}}_{DS}$ in (11.38) specified by

$$\boldsymbol{z}_c = (x_c, \mathbf{0}, k_c, \mathbf{0}), \tag{11.44}$$

and

$$\mathsf{Q} = \mathsf{Q}_0 \oplus \mathsf{I}_2 \oplus \mathsf{I}_2 \oplus \cdots\cdots \oplus \mathsf{I}_2 \equiv \mathsf{I}_{2N} + \boldsymbol{\Delta}, \tag{11.45}$$

where I_2 and I_{2N} are the 2×2 and $2N$×$2N$ unit matrices, respectively. We make a special arrangement of the elements in Q such that

$$[\![\mathsf{Q}]\!] = \mathsf{Q}_0 = \begin{pmatrix} a & b \\ c & d \end{pmatrix}, \tag{11.46}$$

hence

$$[\![\boldsymbol{\Delta}]\!] = \begin{pmatrix} a-1 & b \\ c & d-1 \end{pmatrix}. \tag{11.47}$$

We then define the matrix E via

$$\mathsf{Q}^{-1} = \mathsf{J}^{\mathsf{T}}\mathsf{Q}^{\mathsf{T}}\mathsf{J} \equiv \mathsf{I}_{2N} + \mathsf{E}, \tag{11.48}$$

where

$$\mathsf{E} = \mathsf{J}^{\mathsf{T}}\boldsymbol{\Delta}^{\mathsf{T}}\mathsf{J}, \quad [\![\mathsf{E}]\!] = \begin{pmatrix} d-1 & -b \\ -c & a-1 \end{pmatrix}. \tag{11.49}$$

After these preparations, we can begin to study the time evolution of the Brownian particle with respect to the thermal squeezed coherent state. Firstly, we use (3.12) to calculate the characteristic function of the multimode thermal squeezed coherent state (11.37) as follows:

$$\begin{aligned} \Phi_{ini}(\boldsymbol{z}) &= Tr\left[\hat{\mathcal{U}}_{DS}\,\hat{\varrho}_\beta\hat{\mathcal{U}}_{DS}^\dagger\,\hat{D}(-\boldsymbol{z})\right] \\ &= Tr\left[\hat{\varrho}_\beta\hat{\mathcal{U}}_{DS}^\dagger\,\hat{D}(-\boldsymbol{z})\hat{\mathcal{U}}_{DS}\right] \\ &= Tr\left[\hat{\varrho}_\beta\,\hat{D}(-\boldsymbol{z}\mathsf{Q}^{\mathsf{T}})\right]\exp\left\{i\boldsymbol{z}\mathsf{J}\boldsymbol{z}_c^{\mathsf{T}}\right\}. \end{aligned} \tag{11.50}$$

Comparing with (3.31), we find that this $\Phi_{ini}(\boldsymbol{z})$ has the initial mean vector $\boldsymbol{z}_c$ and the initial covariance matrix

$$\mathsf{Q}^{-1}\boldsymbol{\Sigma}_\beta\mathsf{Q}^{-\mathsf{T}} \equiv \boldsymbol{\Sigma}_\beta^{sq}. \tag{11.51}$$

Substituting (11.48) into (11.51), the latter becomes

$$\Sigma_\beta^{sq} = \Sigma_\beta + \Sigma_\beta \mathsf{E}^\top + \mathsf{E}\Sigma_\beta + \mathsf{E}\Sigma_\beta \mathsf{E}^\top. \tag{11.52}$$

According to (4.37), the time evolution of the above covariance matrix is

$$\begin{aligned}\Sigma_\beta^{sq}(t) &= \mathsf{R}(t)\Sigma_\beta \mathsf{R}^\top(t) + \mathsf{R}(t)\Sigma_\beta \mathsf{E}^\top \mathsf{R}^\top(t) + \mathsf{R}(t)\mathsf{E}\Sigma_\beta \mathsf{R}^\top(t) + \mathsf{R}(t)\mathsf{E}\Sigma_\beta \mathsf{E}^\top \mathsf{R}^\top(t) \\ &= \Sigma_\beta + \mathsf{S}_\beta(t)\mathsf{E}^\top \mathsf{R}^\top(t) + \mathsf{R}(t)\mathsf{E}\mathsf{S}_\beta^\top(t) + \mathsf{R}(t)\mathsf{E}\Sigma_\beta \mathsf{E}^\top \mathsf{R}^\top(t). \end{aligned} \tag{11.53}$$

Now we can perform the reduction by extracting out of (11.53) the elements corresponding to the Brownian particle:

$$\begin{aligned} &[\![\Sigma_\beta^{sq}(t)]\!] \\ &= [\![\Sigma_\beta]\!] + [\![\mathsf{S}_\beta(t)\mathsf{E}^\top \mathsf{R}^\top(t)]\!] + [\![\mathsf{R}(t)\mathsf{E}\mathsf{S}_\beta^\top(t)]\!] + [\![\mathsf{R}(t)\mathsf{E}\Sigma_\beta \mathsf{E}^\top \mathsf{R}^\top(t)]\!] \\ &= [\![\Sigma_\beta]\!] + [\![\mathsf{S}_\beta(t)]\!]\,[\![\mathsf{E}]\!]^\top [\![\mathsf{R}(t)]\!]^\top + [\![\mathsf{R}(t)]\!]\,[\![\mathsf{E}]\!]\,[\![\mathsf{S}_\beta(t)]\!]^\top \\ &+ [\![\mathsf{R}(t)]\!]\,[\![\mathsf{E}]\!]\,[\![\Sigma_\beta]\!]\,[\![\mathsf{E}]\!]^\top [\![\mathsf{R}(t)]\!]^\top, \end{aligned} \tag{11.54}$$

where we have used the property that the only four non-zero elements in E are those in $[\![\mathsf{E}]\!]$. The explicit forms of $\sigma_{qq}(t)$ and $\sigma_{pp}(t)$ for the Brownian particle follow as

$$\begin{aligned}\sigma_{qq}(t) &= -2cu(t)v(t;\beta) + 2(d-1)m\dot{u}(t)v(t;\beta) \\ &- 2(\mathrm{a}-1)mu(t)\dot{v}(t;\beta) + 2bm^2\dot{u}(t)\dot{v}(t;\beta) \\ &+ \sigma_{qq[\beta]}\Big\{1 + \Big[(d-1)m\dot{u}(t) - cu(t)\Big]^2\Big\} \\ &+ \sigma_{pp[\beta]}\Big[-bm\dot{u}(t) + (\mathrm{a}-1)u(t)\Big]^2, \end{aligned} \tag{11.55}$$

and

$$\begin{aligned}\sigma_{pp}(t) &= -2cm^2\dot{u}(t)\dot{v}(t;\beta) + 2(d-1)m^3\ddot{u}(t)\dot{v}(t;\beta) \\ &- 2(\mathrm{a}-1)m^3\dot{u}(t)\ddot{v}(t;\beta) + 2bm^4\ddot{u}(t)\ddot{v}(t;\beta) \\ &+ \sigma_{qq[\beta]}\Big[(d-1)m^2\ddot{u}(t) - cm\dot{u}(t)\Big]^2 \\ &+ \sigma_{pp[\beta]}\Big\{1 + \Big[-bm^2\ddot{u}(t) + (\mathrm{a}-1)m\dot{u}(t)\Big]^2\Big\}. \end{aligned} \tag{11.56}$$

To obtain the time evolution of the mean vector for the Brownian particle, we first substitute (11.44) into (4.36) and get the time evolution of the mean vector of the total system as

$$\boldsymbol{z}^{\mathsf{T}}(t) = \mathsf{R}(t)(x_c, \mathbf{0}, k_c, \mathbf{0})^{\mathsf{T}}, \tag{11.57}$$

hence the time evolution of the mean vector for the Brownian particle is

$$\begin{pmatrix} x(t) \\ k(t) \end{pmatrix} = [\![\mathsf{R}(t)]\!] \begin{pmatrix} x_c \\ k_c \end{pmatrix}, \tag{11.58}$$

i.e., the mean vector follows the restricted phase flow.

When $t \to \infty$, it is easy to see that this state approaches the thermal equilibrium state.

11.4 Displaced Thermal State

Our last example of a non-factorizable initial state is the displaced thermal state [40, 45], which corresponds to the thermal state of the total system with the Brownian particle displaced from the original balanced position by an external constant force. The Hamiltonian which describes this initial state can be taken as a special case of the Hamiltonian in (6.6) of the form

$$\hat{H}'(t) = \hat{H} - \hat{q} f_X \theta(-t), \tag{11.59}$$

where $\hat{H}$ is the model Hamiltonian defined in (6.1), $f_X > 0$ is a constant force, and $\theta(-t)$ is the Heaviside unit step function. The physical picture for the system described by (11.59) is that the Brownian particle is displaced by an external constant force when $t \leq 0$, and accordingly each heat-bath oscillator is also displaced to a new balanced position. The external force is then switched off at the moment $t = 0^+$, so that the total system, which corresponds to the Hamiltonian (6.1), begins to evolve in time.

In the following we shall study the time evolution of the Brownian particle with respect to this initial state. From Secs. 1.2.2 and 3.5, we know that this initial state is a special case of (11.37) with $\hat{\mathcal{U}}_{DS} = \hat{D}(\boldsymbol{z}_c)$, hence it is also a perturbed thermal state. However, an easier way to solve this particular problem is as follows:

Firstly, we need to calculate the characteristic function of this initial state, which is the thermal state with respect to the Hamiltonian $H'(t)$ in (11.59) for $t \leq 0$. From Sec. 3.5, we know that the covariance matrix of this initial state is the same as the model thermal state defined in Chap. 7, hence the only quantity we have to calculate is the new balanced position for the Hamiltonian (11.59) at $t \leq 0$, which corresponds to $\boldsymbol{z}_1$ in (3.35). This new balanced position is easy to determine by completing the square of the Hamiltonian (11.59) for $t \leq 0$:

$$\hat{H}' = \frac{\hat{p}^2}{2m} + \frac{1}{2}m\omega_0^2\left(\hat{q} - \frac{f_X}{m\omega_0^2}\right)^2 + \sum_\ell \left[\frac{\hat{p}_\ell^2}{2m_\ell} + \frac{1}{2}m_\ell\omega_\ell^2(\hat{q}_\ell - \hat{q})^2\right] - \frac{f_X^2}{2m\omega_0^2}. \quad (11.60)$$

Hence we see that the new balanced position, which minimizes (11.60), is $(\boldsymbol{x}_1, \boldsymbol{0})$ with $\boldsymbol{x}_1$ being an N-dimensional vector and each of its component being equal to $f_X/(m\omega_0^2)$. The physical meaning of this result is that the whole system is uniformly shifted by $f_X/(m\omega_0^2)$ in configuration space, which is a trivial consequence for the independent-oscillator model since all heat-bath oscillators are attached (and only attached) to the Brownian particle.

Substituting $\boldsymbol{z}_1 = (\boldsymbol{x}_1, \boldsymbol{0})$ into (3.47), we get the characteristic function of the initial state as

$$\Phi_{ini}(\boldsymbol{z}) = \exp\left\{-\tfrac{1}{2}\boldsymbol{z}\mathsf{J}^\mathsf{T}\boldsymbol{\Sigma}_\beta\mathsf{J}\boldsymbol{z}^\mathsf{T} + i\boldsymbol{z}\mathsf{J}(\boldsymbol{x}_1, \boldsymbol{0})^\mathsf{T}\right\}. \quad (11.61)$$

Since this displaced thermal state differs from the model thermal state (7.40) only by a mean vector, from (7.15) we know that the total covariance matrix is steady, hence the reduced 2×2 covariance matrix for the Brownian particle is still $[\![\boldsymbol{\Sigma}_\beta]\!]$. Therefore to determine the dynamics of the Brownian particle with respect to this initial state, we only have to calculate the time evolution of the mean vector. For $t > 0$, with the new balanced position $(\boldsymbol{x}_1, \boldsymbol{0})$ as the initial value, the expectation value of the position of the Brownian particle evolves according to (6.41):

$$\langle\hat{q}(t)\rangle = m\dot{u}(t)\left(\frac{f_X}{m\omega_0^2}\right) + \sum_\ell m_\ell\dot{u}_\ell(t)\left(\frac{f_X}{m\omega_0^2}\right). \quad (11.62)$$

Instead of calculating the explicit form of the above expression, let us consider an auxiliary system described by the Hamiltonian

$$\hat{H}'_{aux} = \hat{H} - \hat{q}f_X, \quad (11.63)$$

which differs from (11.59) only by the external force f_X being constant for all t. Therefore the position of the Brownian particle is stationary for this auxiliary system, i.e.,

$$\langle \hat{q}(t>0)\rangle_{aux} = \langle \hat{q}(0)\rangle_{aux} = m\dot{u}(t)\left(\frac{f_X}{m\omega_0^2}\right) + \sum_\ell m_\ell \dot{u}_\ell(t)\left(\frac{f_X}{m\omega_0^2}\right) + f_X \int_0^t d\tau\, u(\tau) \tag{11.64}$$

according to (6.41). Since $\langle \hat{q}(0)\rangle = \langle \hat{q}(0)\rangle_{aux}$, comparison of (11.62) and (11.64) gives

$$\begin{aligned} \langle \hat{q}(t)\rangle &= \langle \hat{q}(0)\rangle - f_X \int_0^t d\tau\, u(\tau) \\ &= \frac{f_X}{m\omega_0^2}\left[1 - m\omega_0^2 \int_0^t d\tau\, u(\tau)\right]. \end{aligned} \tag{11.65}$$

It then follows that

$$\langle \hat{p}(t)\rangle = -m f_X u(t). \tag{11.66}$$

As $t \to \infty$, according to (6.45) and (6.46):

$$\int_0^\infty d\tau\, u(\tau) = \frac{1}{Z(0)} = \frac{1}{m\omega_0^2}. \tag{11.67}$$

Substituting (11.67) into (11.65), we find that $\langle \hat{q}(t)\rangle$ approaches zero when $t \to \infty$. Since $u(t)$ decays to zero for $t \to \infty$, so does $\langle \hat{p}(t)\rangle$. Thus we conclude that when $t \to \infty$, the mean vector of the Brownian particle vanishes, hence the state of the Brownian particle approaches the thermal equilibrium state.

Conclusion and Outlook

The aim of this dissertation is not to propose a new theory for quantum harmonic Brownian motion, but rather to develop an innovative methodology with the most appropriate mathematical methods. I began this study by noting that almost all existent approaches involve complicated calculations due to the inevitable reduction operation, which is commonly performed by integrating over all heat-bath degrees of freedom. I then noticed that the reduction operation can be much simplified by using the characteristic function as the representative of the density operator. Accordingly, the time evolution of the Brownian particle is also much easier to calculate via the reduced characteristic function, and the modified phase-space approach is the most efficient approach for studying quantum harmonic Brownian motion.

Of course, the characteristic function is not a new idea. I am neither the first one who noticed the simplicity of using the characteristic function for reduction [33, 43], nor the first who applied it to quantum harmonic Brownian motion [96]. However, I believe that the systematic study of quantum harmonic Brownian motion in a general environment via the characteristic function is original, and no one has previously claimed that (at least for this problem) the path-integral approach can be completely replaced by a more efficient phase-space approach.

In my opinion, solving a problem involving reduction is an art of doing the minimum calculations. In this modified phase-space approach, the reduction operation is performed by a projection in the phase space, which guides us to calculate only those quantities necessary for describing the reduced system. The only inconvenience of this approach is that the characteristic function has no direct physical meaning. But we can easily transform it to the Wigner function whose physical meaning is obvious and clear.

In summary, the success of this modified phase-space approach to quantum harmonic Brownian motion relies upon the following three facts:

(i) The model Hamiltonian is (inhomogeneously) quadratic hence the system is linear, therefore it is suitable for the phase-space approach. Moreover, this kind of Hamiltonian allows an exact and explicit derivation of the fluctuation-dissipation theorem.

(ii) The characteristic function is the most efficient representative of the density operator for performing the reduction operation.

(iii) The analogy between the time-evolution operator and the canonical density operator allows the application of results from dynamical problems to the study of the thermal equilibrium state of the Brownian particle.

Generally speaking, all problems of quantum harmonic Brownian motion can be solved with more efficiency using this modified phase-space approach. The following are some examples that I have not been able to cover in this dissertation:

(I) External classical force $f_K(t)$ linearly coupled to the momentum of the Brownian particle: This corresponds to adding a term

$$\frac{\hat{p}}{m}\int_0^t d\tau f_K(\tau)$$

to the model Hamiltonian (6.6). Doing this puts the position and momentum operators on the same footing in the model Hamiltonian.

(II) Time evolution of the Wigner function and the coordinate representation of the Brownian particle: This can be obtained from the time evolution of the reduced characteristic function via the transformation formulas listed in Sec. 3.2. In particular, for factorizable initial states the exact propagators [10, 73] can be derived from (10.11).

(III) Damping of quantum interference with the initial state being a superposition of two non-identical squeezed coherent states: This is a trivial generalization of the problem discussed in Sec. 10.4.

(IV) System with a few coupled Brownian particles [16]: This corresponds to a reduced system with more than one degree of freedom. According to the formulations in Chap. 5, the modified phase-space approach can be straightforwardly generalized to deal with this kind of problem.

(V) Free Brownian Motion [39, 40, 46]: This corresponds to the limit $\omega_0 \to 0$ in quantum harmonic Brownian motion. Since the model Hamiltonian becomes non-negative definite in this limit, the corresponding $v(t;\beta)$ diverges in general. Therefore it is necessary to replace $v(t;\beta)$ by

$$\Big(v(t;\beta) - v(0;\beta)\Big) + v(0;\beta) = \Big(v(t;\beta) - \sigma_{qq}[\beta]\Big) + \sigma_{qq}[\beta]$$

before taking the limit $\omega_0 \to 0$. It can be shown that only $(v(t;\beta) - \sigma_{qq}[\beta])$, which is always finite, survives after the limit has been taken. To compare with the classical theories discussed in Chap. 2, the quasi-probability distribution functions over configuration space and momentum space can be obtained, respectively, via

$$P(x;t) = \int_{-\infty}^{+\infty} dk\, W_0(x,k;t),$$

and

$$P(k;t) = \int_{-\infty}^{+\infty} dx\, W_0(x,k;t),$$

where $W_0(x,k;t)$ is the reduced Wigner function of the Brownian particle.

Although I have only discussed quantum harmonic Brownian motion in this dissertation, the technique introduced here can be generalized to many other linear quantum open systems. In particular, the characteristic function is useful for any problems involving the reduction operation. In the following, I list four possible non-trivial generalizations of this modified phase-space approach:

(I) Time-dependent quadratic potentials, where the characteristic frequency of the Brownian particle becomes time-dependent, and $\omega_0^2(t)$ is allowed to be zero or negative for certain time intervals (e.g., a particle periodically kicked by a Hooke force [17], a charged particle in the Paul trap [35, 72]): The calculations are similar to those in this dissertation, but the corresponding fundamental solution $u(t)$ cannot be expressed in a closed form in general. It is believed that some approximations are necessary for this kind of problem.

(II) Anharmonic potentials: The phase-space approaches rely on the model Hamiltonian being (inhomogeneously) quadratic. If the Hamiltonian contains higher degree

terms [11, 13, 16], e.g., those in quantum tunneling or quantum coherence problems, then the time evolution of the Wigner function and the characteristic function cannot be exactly determined by the phase flow. As in the path-integral approach, a perturbation scheme is necessary for dealing with these kind of quantum systems.

(III) Finite-state systems: In contrast to the quantum harmonic oscillator which has infinite energy eigenstates, many quantum open systems can be approximated by finite-state systems, e.g., the simplest two-state system [61]. Since these so-called spin-boson Hamiltonians have no classical analogues, there is no corresponding classical phase space. Nevertheless, the technique of performing reduction via the characteristic function is still valid for these systems [43].

(IV) Fermionic heat baths [15]: The model discussed in this dissertation is, of course, a bosonic heat bath. It has been noticed recently that an infinite set of fermionic particles can also serve as a heat bath model. It is thus an interesting problem to generalize this modified phase-space approach to include the fermionic degrees of freedom. A possible way is to start with the supersymmetric Wigner function [1].

APOLOGY: Since Brownian motion, both classical and quantum-mechanical, has a long history and has been studied by innumerable authors, it is almost impossible to exhaust the literature on this subject. To conclude this discussion, I would like to make an apology to those authors whose works I have not been able to quote in this dissertation.

Bibliography

[1] S. Abe, J. Math. Phys. **33**, 1690 (1992).

[2] S. A. Adelman, J. Chem. Phys. **64**, 124 (1976).

[3] G. S. Agarwal and E. Wolf, Phys. Rev. D **2**, 2161; 2187; 2206 (1970), and references therein.

[4] G. S. Agarwal, Phys. Rev. A **4**, 739 (1971).

[5] See, e.g., V. I. Arnold, *Mathematical Methods of Classical Mechanics*, 2nd ed. (Springer-Verlag, New York, NY, 1989).

[6] N. L. Balazs and B. K. Jennings, Phys. Rep. **104**, 347 (1984).

[7] R. Benguria and M. Kac, Phys. Rev. Lett. **46**, 1 (1981).

[8] E. Braun and S. V. Godoy, Physica **86A**, 337 (1977).

[9] K. E. Cahill and R. J. Glauber, Phys. Rev. **177**, 1882 (1969).

[10] A. O. Caldeira and A. J. Leggett, Physica **121A**, 587 (1983); **130A**, 374(E) (1985).

[11] A. O. Caldeira and A. J. Leggett, Ann. Phys. (N.Y.) **149**, 374 (1983); **153**, 445(E) (1984).

[12] A. O. Caldeira and A. J. Leggett, Phys. Rev. A **31**, 1059 (1985).

[13] A. O. Caldeira, Helv. Phys. Acta. **61**, 611 (1988).

[14] H. B. Callen and T. A. Welton, Phys. Rev. **83**, 34 (1951).

[15] Y. Chen, J. Stat. Phys. **47**, 17 (1987), and references therein.

[16] Y.-C. Chen, J. L. Lebowitz, and C. Liverani, Phys. Rev. B **40**, 4664 (1989).

[17] D. Cohen and S. Fishman, Phys. Rev. A **39**, 6478 (1989).

[18] E. Cortés, B. J. West, and K. Lindenberg, J. Chem. Phys. **82**, 2708 (1985).

[19] E. B. Davies, Quantum Theory of Open Systems (Academic Press, New York, NY, 1976).

[20] H. Dekker, Phys. Rep. **80**, 1 (1981), and references therein.

[21] V. V. Dodonov and V. I. Man'ko, in *Invariants and the Evolution of Nonstationary Quantum Systems*, edited by M. A. Markov (Nova Science Publishers, Commack, NY, 1989).

[22] W. Eckhardt, Physica **141A**, 81 (1987).

[23] W. Eckhardt, Phys. Rev. A **35**, 5191 (1987).

[24] A. Einstein, Ann. Phys. (Leipzig) **17**, 549 (1905); **19**, 371 (1906).

[25] R. P. Feynman and F. L. Vernon, Jr., Ann. Phys. (N.Y.) **24**, 118 (1963).

[26] R. P. Feynman and A. R. Hibbs, *Quantum Mechanics and Path Integrals* (McGraw-Hill, New York, NY, 1965).

[27] See, e.g., G. B. Folland, *Harmonic Analysis in Phase Space* (Princeton University Press, Princeton, NJ, 1989).

[28] G. W. Ford and M. Kac, J. Stat. Phys. **46**, 803 (1987).

[29] G. W. Ford, J. T. Lewis, and R. F. O'Connell, J. Stat. Phys. **53**, 439 (1988).

[30] G. W. Ford, J. T. Lewis, and R. F. O'Connell, Phys. Rev. A **37**, 4419 (1988), and references therein.

[31] C. W. Gardiner, *Quantum Noise* (Springer-Verlag, Berlin, Germany, 1991).

[32] See, e.g., R. Gilmore, *Lie Groups, Lie Algebras, and Some of Their Applications* (Wiley, New York, NY, 1974).

[33] A. E. Glassgold and D. Holliday, Phys. Rev. **139**, A1717 (1965).

[34] J. R. Glauber, Phys. Rev. **131**, 2766 (1963).

[35] R. J. Glauber, in *Quantum Measurements in Optics*, edited by P. Tombesi and D. F. Walls (Plenum Press, New York, NY, 1992).

[36] See, e.g., H. Goldstein, *Classical Mechanics*, 2nd ed. (Addision-Wesley, Reading, MA, 1980).

[37] H. Grabert, *Projection Operator Techniques in Nonequilibrium Statistical Mechanics* (Springer-Verlag, Berlin, Germany, 1982).

[38] H. Grabert, U. Weiss, and P. Talkner, Z. Phys. B **55**, 87 (1984).

[39] H. Grabert, P. Schramm, and G.-L. Ingold, Phys. Rev. Lett. **58**, 1285 (1987).

[40] H. Grabert, P. Schramm, and G.-L. Ingold, Phys. Rep. **168**, 115 (1988), and references therein.

[41] I. S. Gradshteyn and I. M. Ryzhik, *Table of Integrals, Series, and Products* (Academic Press, New York, NY, 1980).

[42] A. Grossmann, Commun. Math. Phys. **48**, 191 (1976).

[43] Y. Gu, Phys. Rev. A **32**, 1310 (1985).

[44] F. Haake and R. Reibold, Acta Phys. Austriaca **56**, 37 (1984).

[45] F. Haake and R. Reibold, Phys. Rev. A **32**, 2462 (1985).

[46] V. Hakim and V. Ambegaokar, Phys. Rev. A **32**, 423 (1985).

[47] M. Hillery, R. F. O'Connell, M. O. Scully, and E. P. Wigner, Phys. Rep. **106**, 121 (1984), and references therein.

[48] B. L. Hu, J. P. Paz, and Y. Zhang, Phys. Rev. D **45**, 2843 (1992).

[49] B. L. Hu, J. P. Paz, and Y. Zhang, Phys. Rev. D **47**, 1576 (1993).

[50] See, e.g., J. D. Jackson, *Classical Electrodynamics*, 2nd ed. (Wiley, New York, NY, 1975).

[51] R. Jung, G.-L. Ingold, and H. Grabert, Phys. Rev. A **32**, 2510 (1988).

[52] M. Kac, Am. Math. Monthly **54**, 369 (1947) [reprinted in *Selected Papers on Noise and Stochastic Processes*, edited by N. Wax (Dover Publications, New York, NY, 1954). This book also contains [94], [97], and other important papers on classical theories of Brownian motion.].

[53] See, e.g., N. G. van Kampen, *Stochastic Processes in Physics and Chemistry* (North-Holland, Amsterdam, The Netherlands, 1981).

[54] C. Kiefer, Phys. Lett. **139A**, 201 (1989).

[55] J. R. Klauder and B.-S. Skagerstam, *Coherent States: Applications in Physics and Mathematical Physics* (World Scientific, Singapore, 1985).

[56] R. Kubo, Rep. Prog. Phys. **29**, 255 (1966), and references therein.

[57] R. Kubo, M. Toda, and N. Hashitsume, *Statistical Physics II: Nonequilibrium Statistical Mechanics* (Springer-Verlag, Berlin, Germany, 1985).

[58] See, e.g., L. D. Landau and E. M. Lifshitz, *Quantum Mechanics: Non-Relativistic Theory*, 3rd ed. (Pergamon Press, Oxford, U.K. 1977).

[59] L. D. Landau, E. M. Lifshitz, and L. P. Pitaevskiĭ, *Statistical Physics, Part I*, 3rd ed. (Pergamon Press, Oxford, U.K., 1980).

[60] P. Langevin, C. R. Acad. Sci. **146**, 530 (1908).

[61] A. J. Leggett et al., Rev. Mod. Phys. **59**, 1 (1987).

[62] See, e.g., E. M. Lifshitz and L. P. Pitaevskiĭ, *Physical Kinetics* (Pergamon Press, Oxford, U.K., 1981).

[63] K. Lindenberg and B. J. West, Phys. Rev. A **30**, 568 (1984).

[64] R. G. Littlejohn, Phys. Rep. **138**, 193 (1986).

[65] See, e.g., W. H. Louisell, *Quantum Statistical Properties of Radiation* (Wiley, New York, NY, 1973).

[66] X. Ma and W. Rhodes, Phys. Rev. A **41**, 4625 (1990).

[67] T. Matsubara, Prog. Theor. Phys. **14**, 351 (1955).

[68] B. R. Mollow, Phys. Rev. **162**, 1256 (1967).

[69] H. Mori, Prog. Theor. Phys. **33**, 423 (1965).

[70] J. E. Moyal, Proc. Cambridge Philos. Soc. **45**, 99 (1949).

[71] See, e.g., E. Nelson, *Dynamical Theories of Brownian Motion* (Princeton University Press, Princeton, NJ 1967).

[72] W. Paul, Rev. Mod. Phys. **62**, 531 (1990).

[73] J. P. Paz, S. Habib, and W. H. Zurek, Phys. Rev. D **47**, 488 (1993).

[74] A. M. Perelomov, *Generalized Coherent States and Their Applications* (Springer-Verlag, Berlin, Germany, 1986).

[75] See, e.g., M. Reed and B. Simon, *Methods of Modern Mathematical Physics I: Functional Analysis* (Academic Press, New York, NY, 1972).

[76] P. S. Riseborough, P. Hänggi, and U. Weiss, Phys. Rev. A **31**, 471 (1985).

[77] H. Risken, *The Fokker–Planck Equation: Methods of Solution and Applications*, 2nd ed. (Springer-Verlag, Berlin, Germany, 1989).

[78] A. Royer, Phys. Rev. A **15**, 449 (1977).

[79] P. Schramm, R. Jung, and H. Grabert, Phys. Lett. **107A**, 385 (1985).

[80] P. Schramm and H. Grabert, Phys. Rev. A **34**, 4515 (1986).

[81] E. Schrödinger, Naturwissenschaften **14**, 664 (1926).

[82] See, e.g., L. S. Schulman, *Techniques and Applications of Path Integration* (Wiley, New York, NY, 1981).

[83] J. Schwinger, J. Math. Phys. **2**, 407 (1961).

[84] R. Simon, E.C.G. Sudarshan, and N. Mukunda, Phys. Lett. **124A**, 223 (1987).

[85] C. M. Smith and A. O. Caldeira, Phys. Rev. A **36**, 3509 (1987); **41**, 3103 (1990).

[86] J. Snygg, Am. J. Phys. **48**, 964 (1980), and references therein.

[87] Z. Su et al., Phys. Rev. B **37**, 9810 (1988).

[88] See, e.g., E. C. G. Sudarshan and N. Mukunda, *Classical Dynamics: A Modern Perspective* (Wiley, New York, NY, 1974).

[89] Y. Tanimura and R. Kubo, J. Phys. Soc. Jpn. **58**, 101; 1199 (1989).

[90] V. I. Tatarskiĭ, Sov. Phys. Usp. **26**, 311 (1983).

[91] V. P. Tatarskiĭ, Sov. Phys. Usp. **30**, 134 (1987).

[92] See, e.g., M. E. Taylor, *Noncommutative Harmonic Analysis* (American Mathematical Society, Providence, RI, 1986).

[93] Y. Tikochinsky, J. Math. Phys. **20**, 406 (1979).

[94] G. E. Uhlenbeck and L. S. Ornstein, Phys. Rev. **36**, 823 (1930).

[95] P. Ullersma, Physica **32**, 27; 56; 74; 90 (1966).

[96] W. G. Unruh and W. H. Zurek, Phys. Rev. D **40**, 1071 (1989).

[97] M. C. Wang and G. E. Uhlenbeck, Rev. Mod. Phys. **17**, 323 (1945).

[98] See, e.g., A. J. Weir, *Lebesgue Integration and Measure* (Cambridge University Press, London, U.K., 1973).

[99] H. Weyl, Z. Phys. **46**, 1 (1927).

[100] N. Wiener, J. Math. and Phys. (M.I.T.) **2**, 131 (1923).

[101] E. P. Wigner, Phys. Rev. **40**, 749 (1932).

[102] J. Williamson, Am. J. Math. **58**, 141 (1936).

[103] See, e.g., A. M. Yaglom, *Correlation Theory of Stationary and Related Random Function I: Basic Results* (Springer-Verlag, New York, NY, 1987).

[104] L. Yeh, in *Workshop on Harmonic Oscillators*, edited by D. Han, Y. S. Kim, and W. W. Zachary (NASA Conference Publication, Washington, D.C., 1993).

[105] L. Yeh, in *Second International Workshop on Squeezed States and Uncertainty Relations*, edited by D. Han, Y. S. Kim, and V. I. Man'ko (NASA Conference Publication, Washington, D.C., 1993).

[106] W.-M. Zhang, D. H. Feng, and R. Gilmore, Rev. Mod. Phys. **62**, 867 (1990).

[107] W. H. Zurek, Phys. Today **44** (no.10), 36 (1991).

[108] R. Zwanzig, J. Stat. Phys. **9**, 215 (1973).

LAWRENCE BERKELEY LABORATORY
UNIVERSITY OF CALIFORNIA
TECHNICAL INFORMATION DEPARTMENT
BERKELEY, CALIFORNIA 94720

ABH573
LBL Libraries