0 0 0 0 4 2 0 4 0 9 2

Submitted to Physical Review Letters

RECEIVED
LAWRENCE
RADIATION LABORATORY

MAR 11 1975

LIBRARY AND
DOCUMENTS SECTION

LBL-3345
Preprint

DETERMINATION OF THE AXIAL-VECTOR FORM FACTOR IN THE RADIATIVE DECAY OF THE PION

A. Stetz, J. Carroll, D. Ortendahl, V. Perez-Mendez,
G. Igo, N. Chirapatpimol and M. A. Nasser

September 1974

Prepared for the U. S. Atomic Energy Commission
under Contract W-7405-ENG-48

For Reference

Not to be taken from this room

LAWRENCE BERKELEY LABORATORY
UNIVERSITY OF CALIFORNIA
BERKELEY

LBL-3345
c.1

DISCLAIMER

This document was prepared as an account of work sponsored by the United States Government. While this document is believed to contain correct information, neither the United States Government nor any agency thereof, nor the Regents of the University of California, nor any of their employees, makes any warranty, express or implied, or assumes any legal responsibility for the accuracy, completeness, or usefulness of any information, apparatus, product, or process disclosed, or represents that its use would not infringe privately owned rights. Reference herein to any specific commercial product, process, or service by its trade name, trademark, manufacturer, or otherwise, does not necessarily constitute or imply its endorsement, recommendation, or favoring by the United States Government or any agency thereof, or the Regents of the University of California. The views and opinions of authors expressed herein do not necessarily state or reflect those of the United States Government or any agency thereof or the Regents of the University of California.

0 0 0 0 4 2 0 4 0 9 3

DETERMINATION OF THE AXIAL-VECTOR FORM FACTOR IN THE RADIATIVE DECAY OF THE PION*

A. Stetz,† J. Carroll, D. Ortendahl, and V. Perez-Mendez

Lawrence Berkeley Laboratory
University of California
Berkeley, California 94720

and

G. Igo, N. Chirapatpimol, and M. A. Nasser

Physics Department
University of California
Los Angeles, California

September, 1974

ABSTRACT

The branching ratio for the decay $\pi \to e\nu\gamma$ has been measured in a counter experiment in which the e^+ was detected in a magnetic spectrometer and the γ-ray in a lead glass hodoscope. From the measured branching ratio we determine γ, the ratio of the axial vector to the vector form factor. The latter is computed using CVC and τ_{π^o}, the π^o lifetime. Adopting a best value 0.86×10^{-16} sec, we obtain $\gamma = 0.15 \pm 0.11$ or $\gamma = -2.07 \pm 0.11$. A comparison between the measured values of γ, and various theories is made.

Recent theoretical developments in quark models and current algebra have made it interesting to make a more accurate measurement of the axial-vector form factor of the pion radiative decay, $\pi \to e\nu\gamma$, first measured at CERN over ten years ago.[1] The general form for the radiative decay amplitude has been calculated by several authors.[2] The so called inner bremstrahlung term (IB) arises from diagrams in which a photon is radiated from one of the charged, external lines of the ordinary decay $\pi \to e\nu$ and can be calculated from the observed rate of the decay $\pi \to e\nu$ by standard methods of quantum electrodynamics.

$$\frac{d^2W_{IB}}{dx\,dy} = \frac{\alpha\, W_{e\nu}}{2\pi}\left(\frac{1-y}{x^2}\right)\left(\frac{(x-1)^2+1}{x+y-1}\right) \tag{1}$$

In Eq. (1), $\alpha = 1/137$, $W_{e\nu}$ = rate of $\pi \to e\nu$, $x = 2P_\gamma/m_\pi$, $y = 2P_e/m_\pi$ and the rest mass of the electron has been set equal to zero.

The interesting effect is a structure dependent (SD) process involving intermediate states generated by the strong interaction. These intermediate states are described by vector and axial-vector form factors, $a(q^2)$ and $b(q^2)$, which may be treated as constants because the momentum transfer in the decay is small. The equation for the SD rate is customarily written in terms of the vector form factor, $a(0)$, and $\gamma \equiv b(0)/a(0)$.

$$\frac{d^2W_{SD}}{dx\,dy} = \frac{(G\cos\theta)^2\,\alpha\, m_\pi^7\,|a(0)|^2}{64\,\pi^2}\left\{D(1+\gamma)^2 + E(1-\gamma)^2\right\} \tag{2}$$

Here G is the weak coupling constant, θ is the Cabbibo angle, $D = (1-x)(x+y-1)$, and $E = (1-x)(1-y)^2$. The SD-IB interference term is small and is neglected.

The experimental layout is shown in fig. 1. With the low-energy achromatic pion beam at the Berkeley 184-inch cyclotron, about 2×10^5 π^+/sec were stopped in a counter hodoscope, which was slanted to increase the stopping material and minimize the positron energy loss. The positron momentum was measured in the magnet-spark chamber spectrometer system with a resolution of about 2 MeV. Momentum normalization and resolution were determined by fitting the end point in the momentum spectrum of positrons from μ - decay and by triggering the system occasionally on the monoenergetic positrons from $\pi^+ \rightarrow e^+\nu$.

The photon was detected in a Cerenkov hodoscope consisting of 24 six-inch cubes of lead glass, each with its own 5-inch photomultiplier which determined the position of the photon to within $\pm$ 8°. The apparatus was designed to accept events with a large opening angle between the positron and photon thus covering a region of phase space where the SD part of the amplitude is at its largest and the IB portion is small. For radiative decay events the fractional acceptance of the apparatus was 0.0185, as evaluated by a Monte Carlo calculation, and the event rate was 0.3/hr.

Candidates for radiative decay events were required to have a prompt coincidence between the positron trigger counters and the Cerenkov counter within 100 ns of a pion stop. Only those events with positron momentum greater than 58 MeV were analyzed further. In this way we avoided the overwhelming positron background from muon decay. The distribution of events in ΔT, the time difference between the positron and photon signals, is shown in fig. 2. Radiative decay events stand out as a sharp peak at $\Delta T = 0$ above a flat background. After the subtraction of an appropriately normalized (P,θ) distribution of background events chosen from the out-of-time region of the ΔT spectrum, we are left with 170 $\pm$ 15 events.

In analyzing our data the theoretical distributions given by Eqs. (1)

and (2) were folded with the experimental resolution and acceptance; then a maximum likelihood technique was used to fit the resulting expression to the binned data as a function of momentum and angle simultaneously. Because Eq. (2) is quadratic one obtains two values of γ which give good fits to the data. Figure 3 shows the data in momentum and angle projections, with fitted curves corresponding to the two solutions.

Figure 4 shows the relation between the axial-vector form factor and the vector form factor determined from our data. The dashed curves give the one-standard-deviation error in b(0) due to sources of error internal to this experiment. Approximately equal contributions to this error come from the uncertainty in the photon detection efficiency and from the statistical uncertainty given by the width of the likelihood function.

In order to evaluate the axial-vector form factor, or γ, a value for the vector form factor must be taken from some other source. In the framework of the CVC theory one may calculate the vector form factor from the π^o lifetime,[3]

$$|a(0)| = 2/\left((\pi\, m_\pi^3\, \tau_{\pi^o})\right)^{\frac{1}{2}} = (0.0259 \pm 0.0015)\, m_\pi^{-1} .$$

Here τ_{π^o} is the lifetime for $\pi^o \to \gamma\gamma$, for which we have used the value $\tau_{\pi^o} = (0.84 \pm 0.10) \times 10^{-16}$ sec.[4] This value for τ_{π^o} must be used cautiously since even the most recent measurements do not form a consistent set. A value for the vector form factor, independent of the π^o lifetime, may also be obtained from a vector dominance model in which an unsubtracted dispersion relation is saturated by the ρ meson.[5] This method yields $|a(0)| = (0.035 \pm 0.0025)\, m_\pi^{-1}$.

The values of b(0) and γ obtained from combining these values of a(0) with our data are summarized in Table I. Note that although we obtain both the magnitude and sign of γ (for each solution), the sign of b(0) is not determined because the sign of a(0) is unknown.

To compare our experiment with that of Depommier, et al.,[1] we chose the

value of a(0) used in their analysis to calculate γ from our data: γ = 0.263 ± 0.10 or -2.18 ± 0.10 (internal errors only). On the basis of 143 events they obtained γ = 0.4 or -2.2 (no errors quoted), in agreement with our results.

The predictions made within the framework of current algebra[6,7,8] range from $|\gamma|$ = 0.12 to $|\gamma|$ = 2.14. Despite the wide range of these predictions, the calculations are essentially identical except in their treatment of the matrix element $\langle\pi|A_\mu|\gamma\rangle$ where A_μ is the axial-vector current. If it is assumed that this vertex function satisfies an unsubtracted dispersion relation dominated by the A_1 pole, then $b(0) = f_\pi/m_\rho^2$ (f_π is the ordinary pion decay coupling constant) and $|\gamma| = 0.59$.[9] It is generally believed, however, that this matrix element must have a subtraction since $\langle\pi^0|A_\mu|\rho^-\rangle$ and $\langle\pi^0|V_\mu|A_1^-\rangle$, which are related to it through vector dominance, are known to require subtractions.[10] Schnitzer and Weinberg[11] have used current algebra to compute the various matrix elements; the parameter δ appearing in their formalism relates the unknown subtraction constant to the rates for ρ and A_1 decay, the $\pi^+ - \pi^0$ mass difference and to the electromagnetic form factor of the pion. This is summarized in Table II. $\delta = -1$ corresponds to no subtraction in the pion form factor, $\delta = -\frac{1}{2}$ comes from a fit to the experimental widths of the ρ and A_1. The last choice, $\delta = 0$, has the merit that, in the soft pion limit, the logarithmic divergence from the A_1 contribution to the mass difference cancels out.[12]

It is clear that theory requires a value of γ smaller than our large negative solutions. (An exception is the prediction $|\gamma| = 2.14$,[7] which is, however, based on a very uncertain determination of the pion charge radius.) Thus even with the uncertainty in the value of a(0) we can conclude from this experiment that γ must be close to zero and that, at least within the context of the Schnitzer-Weinberg formalism, a subtraction is required in the dispersion

relations for both the pion form factor and the $\langle\pi|A_\mu|\rho\rangle$ matrix element. We should point out that recent work using substantially different current algebra techniques predicts $\gamma \sim .7$.[13]

Finally, we would like to draw attention to the prediction $\gamma = 0$ of the static quark model[14] which is in agreement with our results. However, this model involves assumptions which are quite incompatible with the current algebra point of view.[15]

ACKNOWLEDGMENT

We wish to gratefully acknowledge the assistance of Dr. M. Dixit during the preparation of the experiment, and to thank J. Vale, L. Kanstein and the members of the 184 inch cyclotron crew for the many hours of smooth machine operation.

FOOTNOTES AND REFERENCES

*This work is supported by the United State Atomic Energy Commission.

†Now at the Physics Department, University of Alberta, Edmonton, Alberta.

1. P. Depommier, J. Heintze, C. Rubbia, and V. Soergel, Phys. Lett. 7, 285 (1963); V Soergel, Proceedings of the SIN Summer School, Leysin (1969).

2. S. Bludman and J. Young, Phys. Rev. 118, 602 (1960);
D. Neville, Phys. Rev. 124, 2037 (1961);
S. Brown and S. Bludman, Phys. Rev. 136, B1160 (1964);
M. G. Smoes, Nucl. Phys. B20, 237 (1970);
D. Bardin and S. Bilen'kii, Sov. J. of Nucl. Phys. 16, 311 (1972).

3. V. F. Muller, Z. Phys, 173, 438 (1963).

4. Particle Data Group, Phys. Lett. 50B, 41 (1974).

5. N. J. Carron and R. L. Schult, Phys. Rev. D1, 3171 (1970).

6. T. Das, V. S. Mathur, and S. Okubo, Phys. Rev. Lett. 19, 859 (1967);
J. S. Vaishya, Phys. Rev. 173, 1757 (1968). The results of Refs. 6, 7, and 8 have been rescaled using $\tau_{\pi^0} = 0.84 \times 10^{-16}$ sec.

7. V. S. Berezinskii, Sov. J. of Nucl. Phys. 8, 700 (1969).

8. S. Brown, private communication (1973);
S. Brown and G. West, Phys. Rev. 168, 1605 (1968).

9. R. E. Marshak, Riazuddin, C. P. Ryan, Theory of Weak Interactions in Particle Physics, Wiley, Rochester (1969);
Riazuddin and Fayyazuddin, Phys. Rev. 171, 1428 (1968).

10. T. Das, V. S. Mathur, and S. Okubo, Phys. Rev. Lett. 19, 1067 (1967);
S. G. Brown and G. B. West, Phys. Rev. Lett. 19, 812 (1967);
D. A. Geffen, Phys. Rev. Lett. 19, 770 (1967); see also ref. 8.

11. J. H. Schnitzer and S. Weinberg, Phys. Rev. 164, 1828 (1967).

12. Fayyazuddin and Riazuddin, Nuovo Cimento 54, 520 (1968).

13. J. Gregor, Ph.D. Thesis, Columbia University (1974).

14. W. Kummer and J. Kuti, Nuovo Cimento 45, 242 (1966).

15. F. Schenk and A. Wullschleger, SIN Preprint (1973).

Table I. Values of b(0) and γ obtained from the experimental solutions and the two values a(0).

$a(0) \times m_\pi^{-1}$	γ (upper solution)	$b(0) \times m_\pi^{-1}$	γ (lower solution)	$b(0) \times m_\pi^{-1}$
.0259 (CVC)	0.15 ± .11	.0040 ± .022	-2.07 ± .11	-.0537 ± .0022
.035 (ρ-dominance)	-0.18 ± .09	-.0062 ± .0040	-1.74 ± .09	-.0609 ± .0040

Table II. Predicted values of several observables for various choices of δ.

δ	$\lvert\gamma\rvert$	$\Gamma(A_1 \to \rho\pi)$	$\Gamma(\rho \to \pi\pi)$	Pion charge radius
-1	0.59	61 MeV	140 MeV	0.63 fermi
-½	0.35	116 MeV	107 MeV	0.59 fermi
0	0.	190 MeV	79 MeV	0.55 fermi

FIGURE CAPTIONS

Fig. 1. Experimental Layout

Fig. 2. Spectrum of time differences, ΔT, between positron and photon signals.

Fig. 3. (a) Positron momentum spectrum

(b) Opening angle distribution

Fig. 4. Relationship between a(0) and b(0) as determined by our data. The portion of the graph which is symmetric upon the exchange $b \to (-b)$, $a \to (-a)$ is not shown.

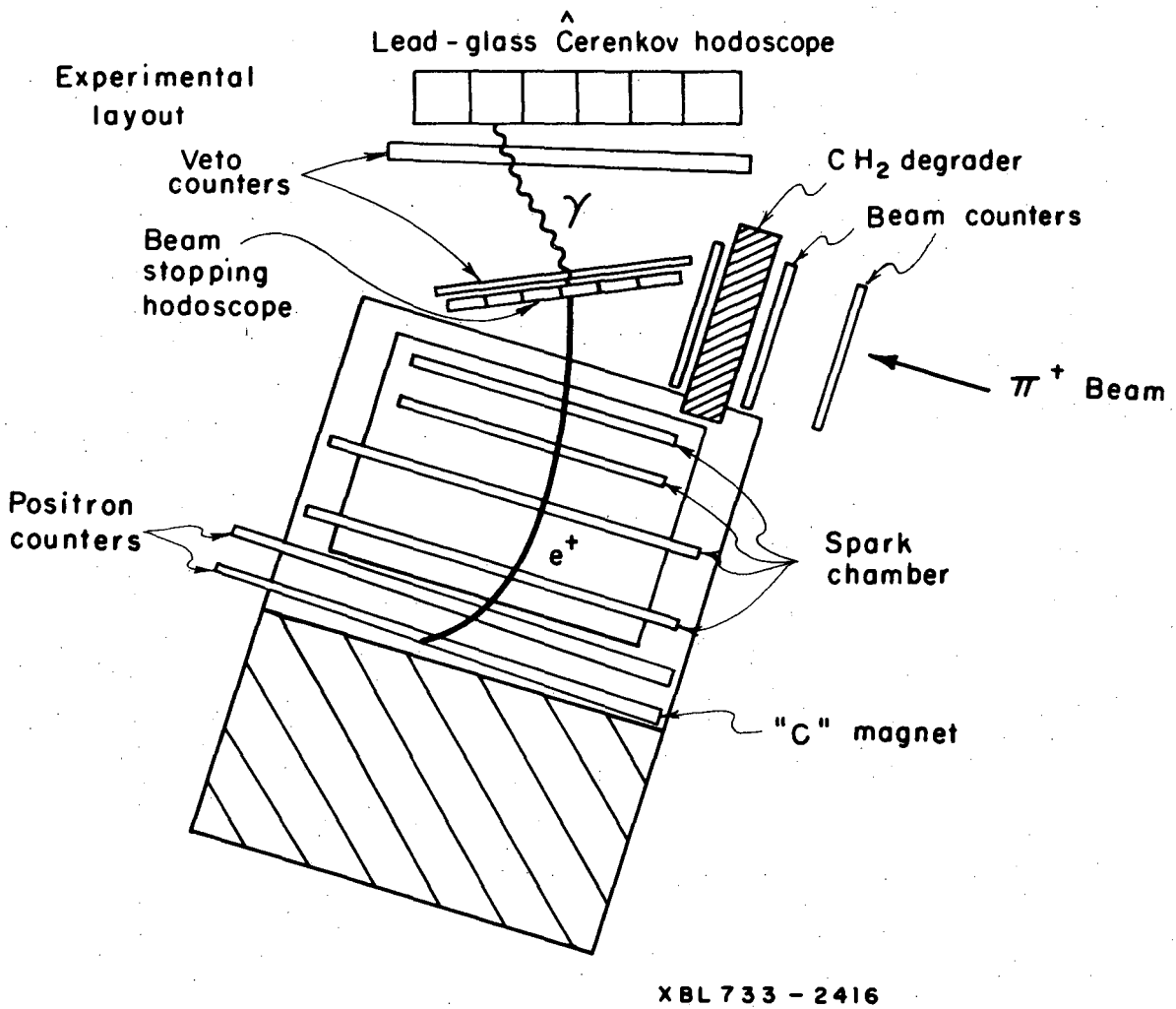
Lead - glass Čerenkov hodoscope
Experimental layout
Veto counters
C H2 degrader
Beam counters
γ
Beam stopping hodoscope
π+ Beam
Positron counters
e+
Spark chamber
"C" magnet
XBL 733 - 2416

Fig. 1.

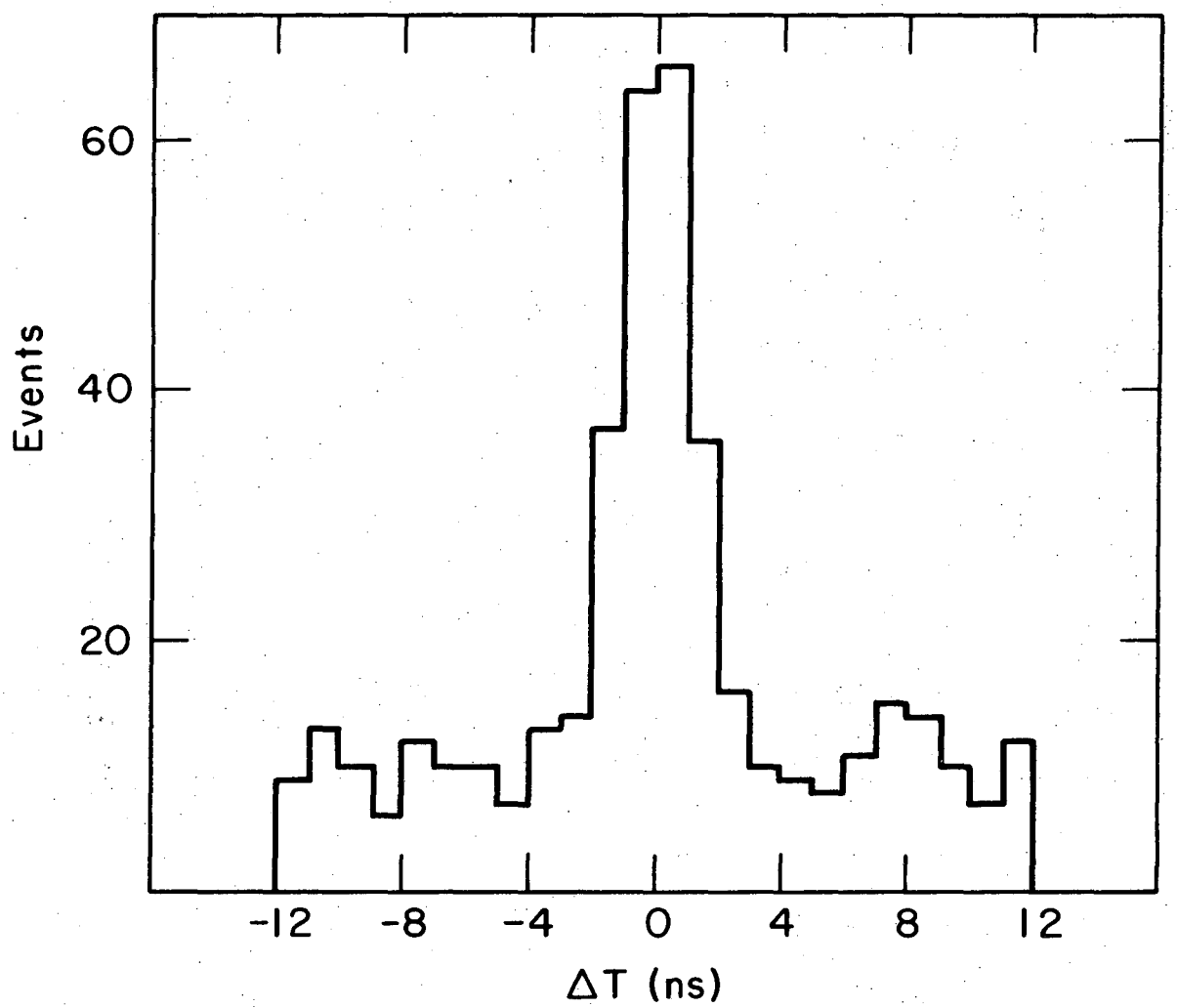

XBL746-3509

Fig. 2.

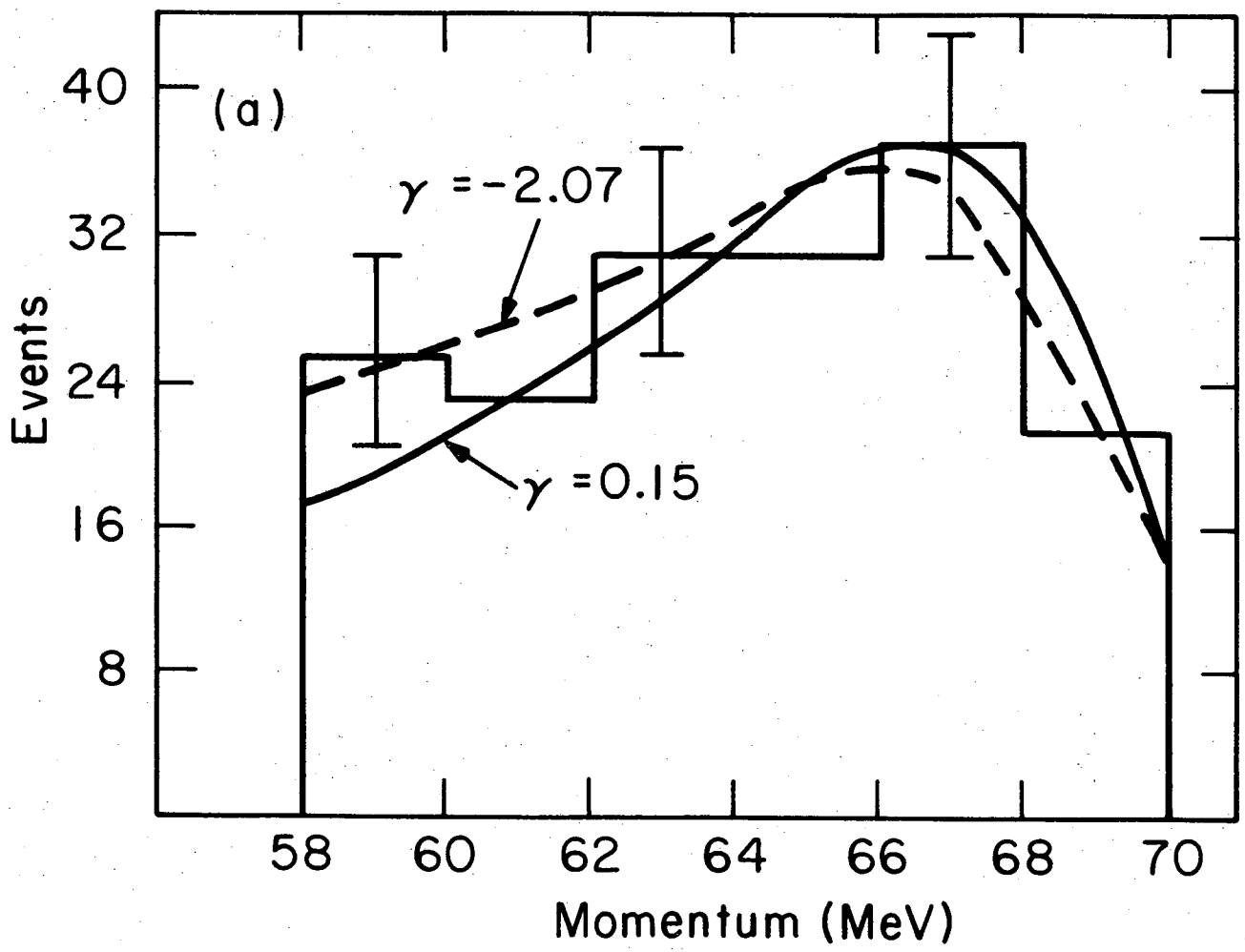

XBL749-4214

Fig. 3a.

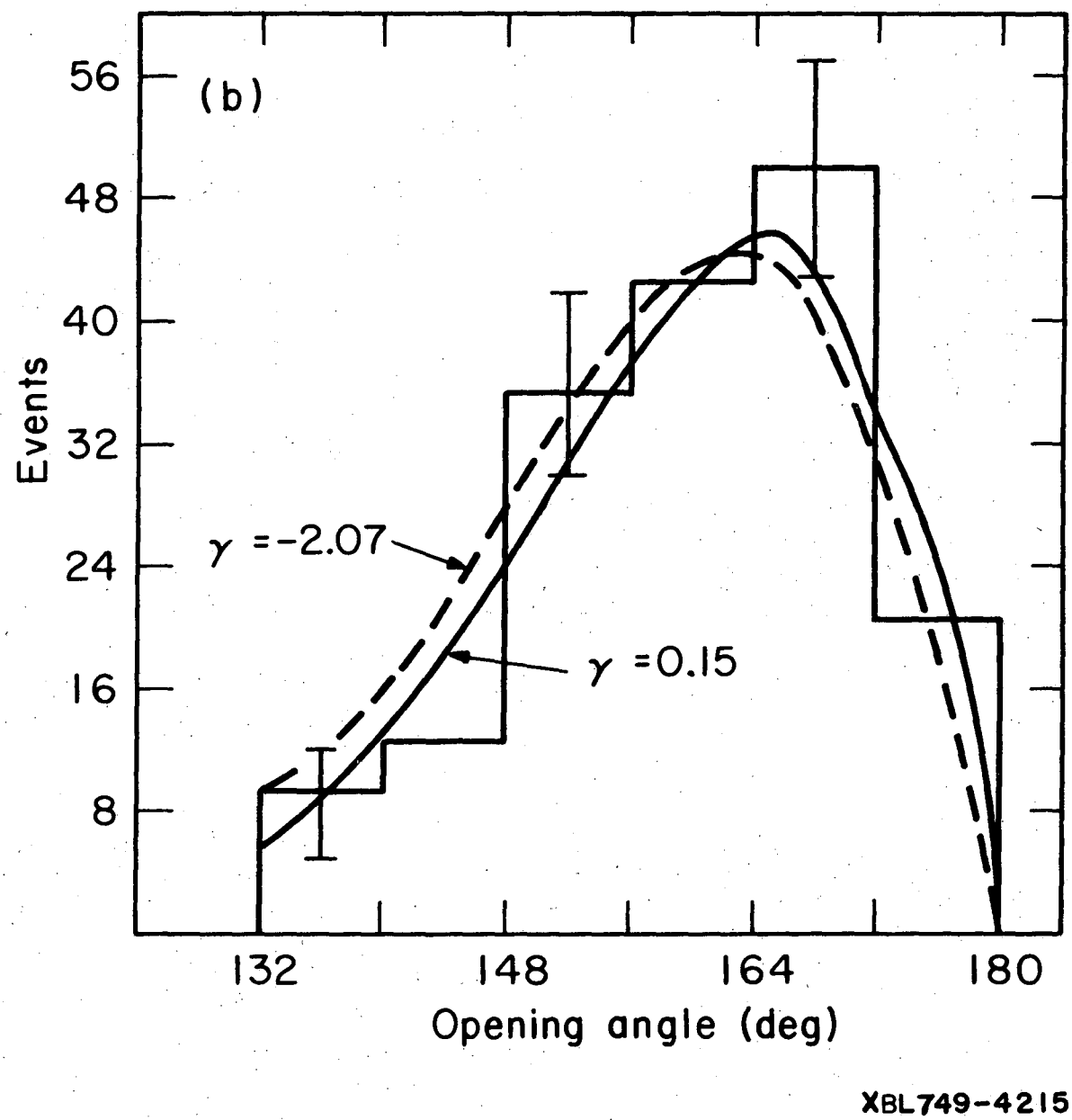
(b)
56
48
40
32
24
16
8
Events
γ =-2.07
γ =0.15
132
148
164
180
Opening angle (deg)
XBL749-4215

Fig. 3b.

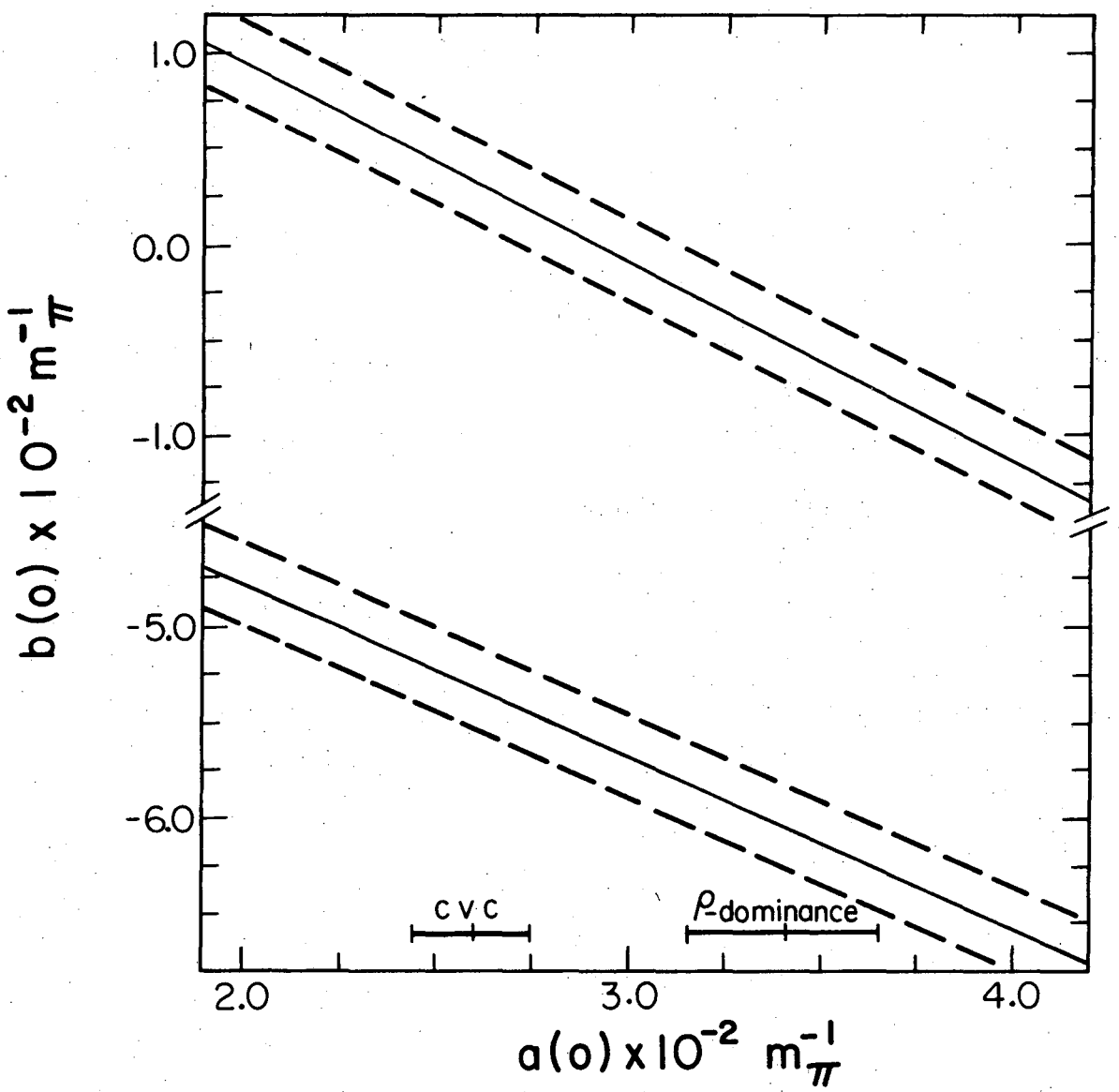

XBL749-4216

Fig. 4.

0 0 0 0 4 2 0 4 1 0 1

LEGAL NOTICE

This report was prepared as an account of work sponsored by the United States Government. Neither the United States nor the United States Atomic Energy Commission, nor any of their employees, nor any of their contractors, subcontractors, or their employees, makes any warranty, express or implied, or assumes any legal liability or responsibility for the accuracy, completeness or usefulness of any information, apparatus, product or process disclosed, or represents that its use would not infringe privately owned rights.

TECHNICAL INFORMATION DIVISION
LAWRENCE BERKELEY LABORATORY
UNIVERSITY OF CALIFORNIA
BERKELEY, CALIFORNIA 94720