0 0 0 5 4 2 0 4 5 3 0

Presented at the IEEE Particle
Accelerator Conference, Washington, DC,
March 12 - 14, 1975

LBL-3369
c. 1

A NEW HIGH INTENSITY K-BEAM AT THE BEVATRON

C. Leemann, R. Morgado, and R. Sah

March 1975

Prepared for the U. S. Energy Research and
Development Administration under Contract W-7405-ENG-48

For Reference

Not to be taken from this room

LAWRENCE BERKELEY LABORATORY
UNIVERSITY OF CALIFORNIA
BERKELEY

LBL-3369
c. 1

DISCLAIMER

This document was prepared as an account of work sponsored by the United States Government. While this document is believed to contain correct information, neither the United States Government nor any agency thereof, nor the Regents of the University of California, nor any of their employees, makes any warranty, express or implied, or assumes any legal responsibility for the accuracy, completeness, or usefulness of any information, apparatus, product, or process disclosed, or represents that its use would not infringe privately owned rights. Reference herein to any specific commercial product, process, or service by its trade name, trademark, manufacturer, or otherwise, does not necessarily constitute or imply its endorsement, recommendation, or favoring by the United States Government or any agency thereof, or the Regents of the University of California. The views and opinions of authors expressed herein do not necessarily state or reflect those of the United States Government or any agency thereof or the Regents of the University of California.

0 0 0 0 4 2 0 4 5 3 1

LBL-3369

A NEW HIGH INTENSITY K-BEAM AT THE BEVATRON*

1975 Particle Accelerator Conference

C. Leemann, R. Morgado, R. Sah
Lawrence Berkeley Laboratory
University of California
Berkeley, California

Abstract

A new high-intensity K-beam has been installed at the Bevatron. The design goal was 2.2 x 10^5 K^+ s per machine pulse at 500 MeV/c, 7.4 x 10^4 stopped K^+ s, and less than $10^6\pi$ contamination. Large horizontal acceptance (± 210 mrad), short length (∿ 10 m) and two stages of separation are the most prominent features of the design. The observed optical properties are in reasonable agreement with the calculations. An evaluation of the performance of this beam is presented.

Introduction

All major components for the new high-intensity, low momentum K-beam at the Bevatron had been fabricated by Spring 1974. Installation began after an extensive magnet measuring program. In Fall 1974 brief proton running periods became available during which the first tests of this new facility were performed. Primary beam intensity at the K-beam target was limited to 3.10^{11} protons per pulse due to primary beam sharing with three other experiments with higher priority. Useful data were obtained nevertheless and the results are reported below with a short recapitulation of the main features of the design and hardware of this unique facility.

Design Goals

The design goal was to produce a high intensity, low momentum or stopped K-beam using special purpose elements but established technology. Considerations of the production cross section, magnet and separator dimensions, separator voltage, decay losses and the requirement of stopping the beam within an experimental apparatus suggested 500 MeV/c as the nominal momentum. Large acceptance, (± 210 mrad horizontally, ± 24 mrad vertically) combined with the shortest possible length (10 m) and high primary proton intensities (∿ 3.10^{12} protons per pulse on target) are the main characteristics of the design. Assuming prime user status or the higher proton intensities predicted with the re-built 50 MeV injector, two stage separation was necessary for manageable π-back-ground. From experience with previous K-beams at the Bevatron the following previously published design figures were scaled:

Proton Intensity	3.10^{12} protons per pulse
K^+s transmitted	$2.2.10^5$ per pulse at 500 MeV/c
K^+s stopped	$7.4.10^4$ K^+ per pulse
π's transmitted	$8.6.10^5$ per pulse
Momentum Bandwidth	± 2%

Design Considerations

The layout of the beam line is depicted in Figure 1. The following considerations were influential in determining the final design:

(1) A large initial bend for momentum dispersion at beam mid-point,

(2) A symmetric design for final momentum recombination and reduction of certain higher order aberrations,

(3) Minimal use of strong focussing devices to reduce chromatic aberration,

(4) Cost and power efficiency with pure dipole bending magnets.

Hardware

The magnets and separators have been described extensively elsewhere.[1] All magnets use field clamps to limit stray axial fields, and to allow quadrupoles Q1 and Q3 to be mounted within a minimum distance of the dipoles. The following tables recapitulate the most basic parameters:

Table 1-Bending Magnets

	Magnet 1	Magnet 2
Useful aperture (cm)	10.16x45.72	10.16x45.72
Magnetic Field (T)	1.9	1.9
Mag. bend radius (m)	0.879	0.879
Magnet gap (cm)	14.2	14.2

Table 2-Quadrupoles

	Q1 & Q3	Q2
Useful aperture (cm)	15.24x27.94	2.54x27.94
Nominal gradient (T/m)	3.26	4.06
Pole Tip Field (T)	0.414	0.414
Pole Tip Length	0.406	0.234

Electrostatic Separators

The separators do not contain a crossed magnetic field and steel enclosures are used to reduce any stray fields. Voltage holding techniques include the use of highly polished stainless steel surfaces, heated glass cathodes, and electrodes with 5 cm radii on the edges. Two power supplies provide positive and negative high voltages so the full voltage appears only between the electrodes. The separators are operated in an Argon atmosphere at 1 μm Hg. pressure. Separator dimensions are given in Table 3:

Table 3-Separator Dimensions

Electrode Length (m)	1.524
Electrode width (flat) (cm)	30.48
Range of Gap Adjustment (cm)	2.54 to 12.7

Hardware Performance

All magnets met design specifications with the exception of the modified M5 magnet (first dipole) which exhibited larger inhomogeneities than specified. Exact ray tracings however demonstrated that no significant degradation in beam quality results. The separators

perform well but minor problems in cable connectors limit operation presently to slightly below 700 kV compared to the design value of 750 kV. Close to 1 MV operation seems now feasible with modifications in the connections.

Beam Optics

In addition to the calculations referred to in Ref. 1 a computer code, QUICKY, was developed by one of the authors (C.L.) and used especially in the determination of the effects of magnet imperfections.

Angular acceptance is defined vertically by the entrance magnet aperture and horizontally by the aperture of the quadrupole Q1. Momentum acceptance is determined by the horizontal aperture width at Q2 (first mass slit).

At the location of the first mass slit (F1) large aberrations occur in the (X,X')-plane while chromatic aberration is the only important higher order term in the vertical plane. Sample phase space plots at the entrance of Q2 are shown in Figs 2 and 3.

At the second mass slit very good momentum recombination is obtained as demonistrated by Figs 4 and 5, which compare momenta differing by 5%. In the vertical plane chromatic aberration remains the only important higher order term.

Source phase space was generated by randomly distributing rays within the angular acceptance and a target at 7.5 cm length.

Separation between π s and Ks is 11mm and 22mm at F1 and F2 respectively at 7MV/m.

Tuning the K-Beam

A. General Considerations

As designed, the K-beam is relatively inflexible in that only a few parameters can be varied within relatively narrow limits. The goal was to maximize transmission of the K's while suppressing transmission of protons, π's and electrons. All elements are manualy controlled with the exception of the first bending magnet which is computer controlled from the Bevatron Main Control Room. The field level in this magnet defines the accepted central momentum. The correct settings for quadrupoles Q1 and Q3 are determined by the required vertical spot sizes at the first and second vertical foci where the mass slits are located. The second bending magnet must achieve the correct beam trajectory and provide a momentum recombination of the horizontal focus. Computed current settings, using data determined by the magnet measuring program, provide starting values. Quadrupole Q2 located at the midpoint of the beamline is less critical. To first order it has no effect on the final beam spot size and in practice it was found that turning it off reduced the transmitted intensity by approximately a factor of two. Smaller changes produced little effect on the transmitted intensity. The Q2 calculated current was therefore used throughout the tests without further attempts at tuning.

Particle separation depends on the correct vertical displacement of Q1 and Q3 as functions of the applied separator voltage since these quadrupoles are designed to produce the vertical steering normally provided by the crossed magnetic field in a velocity separator. An iterative approach was necessary in view of the two stage separation concept and the fact that after the first mass slit sufficient space is not available to accomodate a reliable detector for distinguishing π s from K s.

B. Tune-up Procedure

Despite the basic simplicity of the device a series of complications arise mainly at the first vertical focus, which is crucial to good particle separation. Dispersion at the first horizontal focus is approximately 75 mm/%$\Delta p/p$. Due to the large horizontal magnification, further enlarged by aberrations, the horizontal width for any given momentum is approximately 150mm. The effects of the overlap combined with chromatic aberrations in the vertical plane will degrade the vertical focus.

A two-step tuning program was followed. The plan was to set all magnet currents with separators off and tune the optics on the π^+ component. Then the separators were turned on and Q1 and Q3 vertically displaced to select K^+'s which are produced at 10 times greater intensity than K^-'s at Bevatron proton beam energies. MWPC's were employed, one at the intermediate focus (location of first slit) and one at the final focus.[2] In addition image intensified Polaroid pictures of the beam were taken at the intermediate focus and at a series of locations near the final focus. This allowed tuning of Q1 and Q3 and the second bending magnet.

The vertical spot size FWHM at F1 was in good agreement with the calculated value of $\sim$ 6mm, while the beam envelope at the final focus closely followed calculated tracings of rays orginating randomly from the target volume with the accepted angular divergences. All current settings were within a few percent of the calculated values.

In order to separate π's from K's a 2mm thick scintillator S1 was placed downstream of the first mass slit. A second scintillator S2 approximately 12mm thick and a threshold Cerenkow counter C were located immediately downstream of the exit field clamps of the second bending magnet. Primary beam intensity on the target was independently monitored by a threefold scintillator telescope and a SEM. Beam steering onto the target was monitored by a MWPC with 3mm resolution just upstream of the production target. The π-K difference in time of flight from S1 to S3 was 6.5 ns. Pulse height differences in S3 allow additional separation as the π s produce pulse amplitudes 60% as high as those resulting from K s. An event $(S1.S3.\bar{C})$ with the appropriate delay between S1 and (S3.C) and with pulse height discrimination in S3 was counted as a K. The S3 singles rate without pulse height discrimination was taken as a measure of the π-flux reaching the cave since the "beam-off" singles counting rate in S3 was modest.

The electrostatic separators were turned on and the quadrupoles Q1, Q3 displaced vertically to the calculated values. Vertically sweeping either quadrupole produced varing K/π-ratios and after several iterations, optimum positions were found.

C. Results and Discussion

The results of these tests can be summarized as follows:

K^+ flux	$\sim$2000 K^+/10" protons
π^+/K^+ ratio	18/1

These values fall short of the design figures by a factor of 3.5 in K flux and a factor of 4 for the π-rejection. Explanations for the discrepancies are discussed below and a program to eliminate present short-comings is being implemented. Possible sources of improvement are:

a) Targetting Efficiency

Conservatively small targets were used and sweeping the primary beam suggests that the targetting efficiency was at most 50%. An increase in target width by a factor of 2 and target length by a factor of 1.5 will be tested shortly. The increase in physical width of the target will add little to the already large apparent width which results from the large horzontal acceptance.

b) K-Beam Momentum

The K-beam momentum was 450 MeV/c for these tests because it was hoped that a lower beam momentum than the 500 MeV/c design value would facilitate separation. This however results in a 0.74 reduction in K intensity due to inflight decays.

c) Separator Voltages

The advantage of tuning a lower momentum was undermined by two unexpected occurences. Quadrupoles Q1 and Q3 must be displaced vertically in order to steer the beam through the mass slit and bring it back into and parallel with the vertical mid-plane after Q3. Unexpected settling of beam components after installation distorted the reference mid-plane severely enough that the required quadrupole travel exceeded the amount available. Consequently both separators were run at a reduced 4.5 MV/m instead of the design value of 7 MV/m. Vertical repositioning of beam components and an increase in available vertical quadrupole travel is planned to circumvent this problem.

d) Slit Design

Improvements in the design of the mass slits will further improve performance. The first mass slit is a preliminary design, shaped to follow the beam envelope according to second order optics calculations. This design will be re-evalated. The second mass slit was planned to be designed to match experimal requirements, keeping in mind that the final vertical waist can be moved longitudinally by modest amounts. Presently only a simple collimator with flat parallel jaws is used.

Summary

A summary of the modifications and expected improvements is listed below:

Item	Intensity Improvement Factor
Increase Target size	2 to 2.5
Increase momentum to 500 MeV/c instead of 450 MeV/c	1.35
Re-design of mass slit - undetermined	
Combined effect	2.7 to 3.4

The expectation of achieving the design goal with the above improvements is justifiable. In addition π-rejection will also improve with the increase in separator voltages. Any further barriers to achieving the design values will be pinpointed by careful measurements of beam phase space at critical locations should it become necessary. Additional variable collimators after the first bending magnet will also allow a more detailed investigation of the transmitted phase space for comparison with calculations.

References:

1) R. C. Sah et al, High Intensity Stopped K-Meson at the Bevatron, Proceedings 1973 Particle Accelerator Conference, pp 455-458.

2) R. Morgado, J. Cuperus, A Multi-Wire Chamber System for Heavy Ion Beam Monitoring at the Bevalac, to be published 1975 Particle Accelerator Conference.

*Work performed under the auspices of the Energy Research Development Administration

Figure Captions

Fig 1. High Intensity Stopped K-Beam

Fig 2. (X,X') - Phase Space at entrance of first mass slit; $\Delta p/p \sim -0.75\%$, X in mm, X' in radians

Fig 3. (Y,Y') - Phase Space at entrance of first mass slit, $\Delta p/p \sim -0.75\%$, Y in units of 0.1mm, Y' in radians

Fig 4. (X,X') - Phase Space at second vertical focus $\Delta p/p = +2.5\%$, X in mm, X' in radians (all rays are shown including those actually intercepted at Q2 due to dispersion)

Fig 5. (X,X') - Phase Space at second vertical focus $\Delta p/p = -2.5\%$, X in mm, X' in radians (all rays shown as in Fig 4.)

0 0 0 0 4 2 0 4 5 3 3

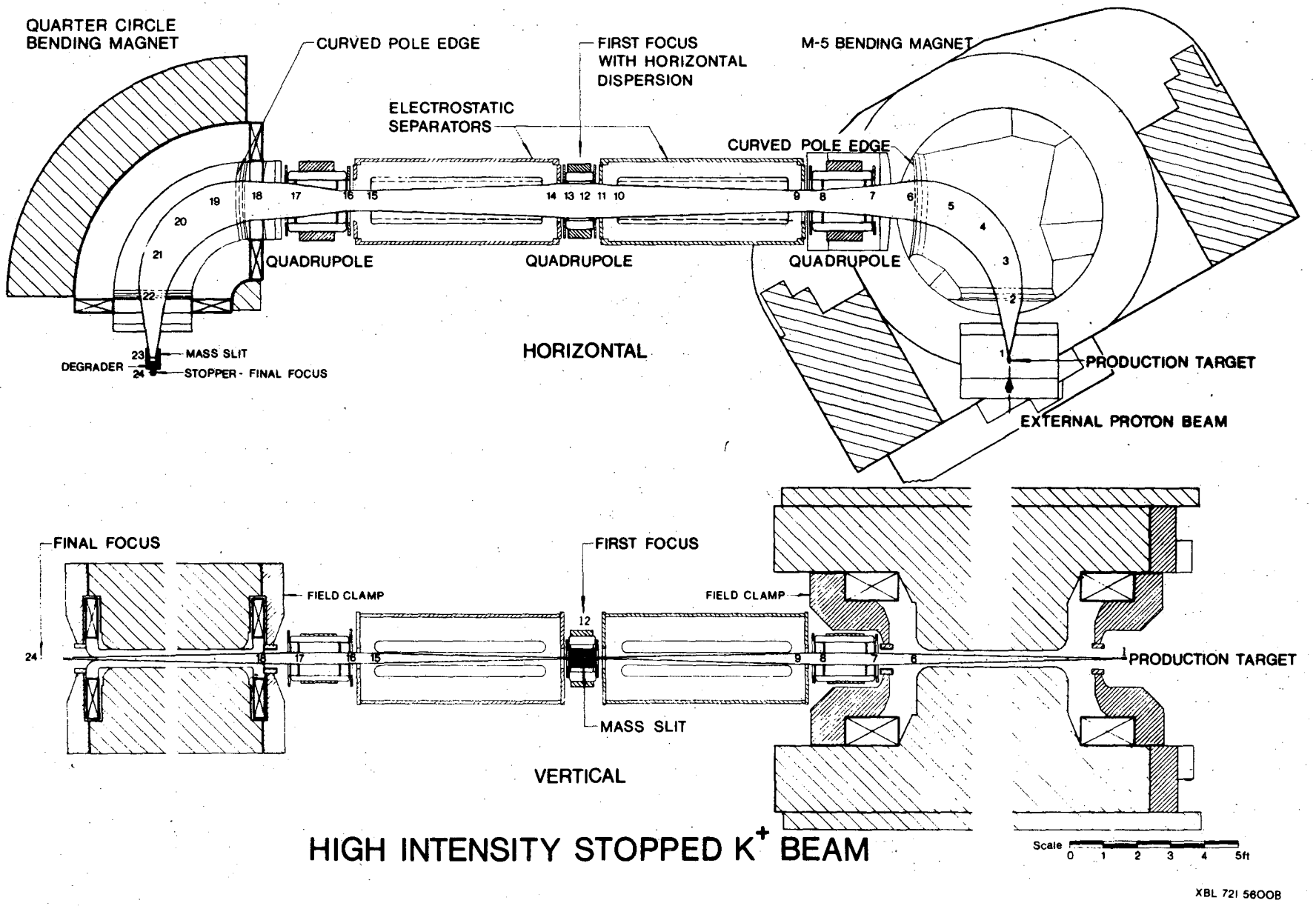

HIGH INTENSITY STOPPED K^+ BEAM

Fig. 1

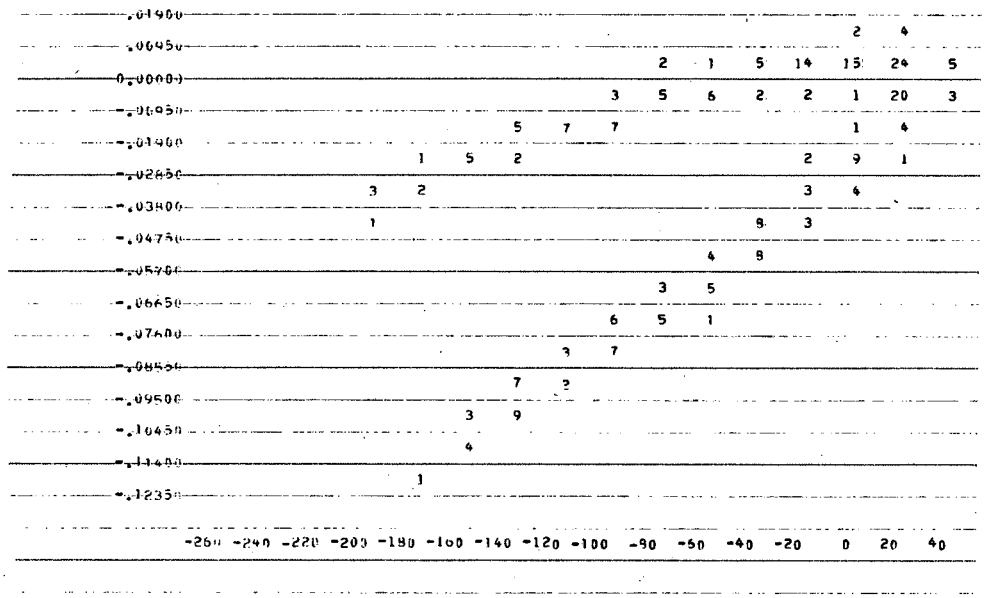
.01900
.00950
0.00000
-.00950
-.01900
-.02850
-.03800
-.04750
-.05700
-.06650
-.07600
-.08550
-.09500
-.10450
-.11400
-.12350
-260 -240 -220 -200 -180 -160 -140 -120 -100 -80 -60 -40 -20 0 20 40

Fig. 2

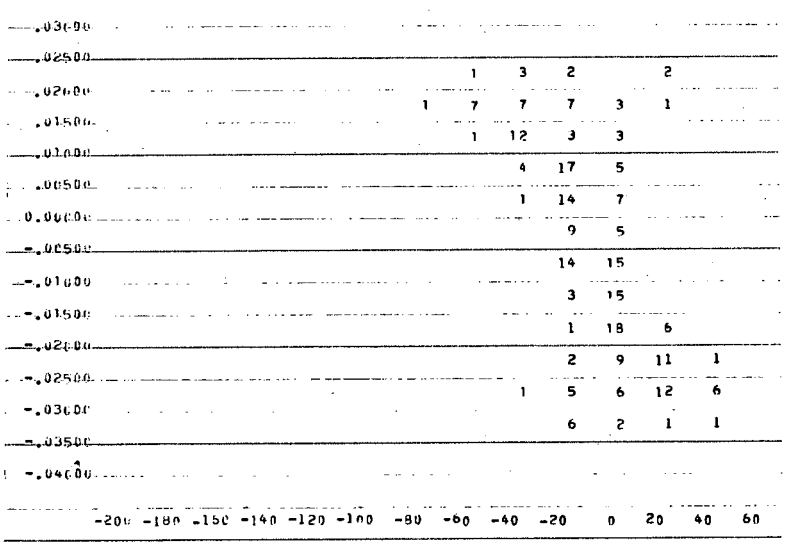
.03000
.02500
.02000
.01500
.01000
.00500
0.00000
-.00500
-.01000
-.01500
-.02000
-.02500
-.03000
-.03500
-.04000
-200 -180 -160 -140 -120 -100 -80 -60 -40 -20 0 20 40 60

Fig. 3

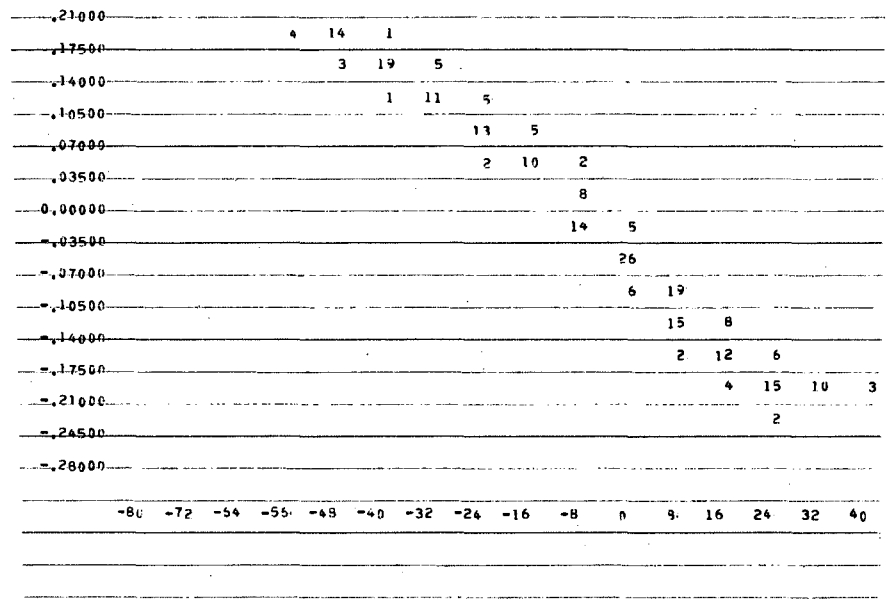
.21000
.17500
.14000
.10500
.07000
.03500
0.00000
-.03500
-.07000
-.10500
-.14000
-.17500
-.21000
-.24500
-.28000
-80 -72 -54 -55 -48 -40 -32 -24 -16 -8 0 8 16 24 32 40

Fig. 4

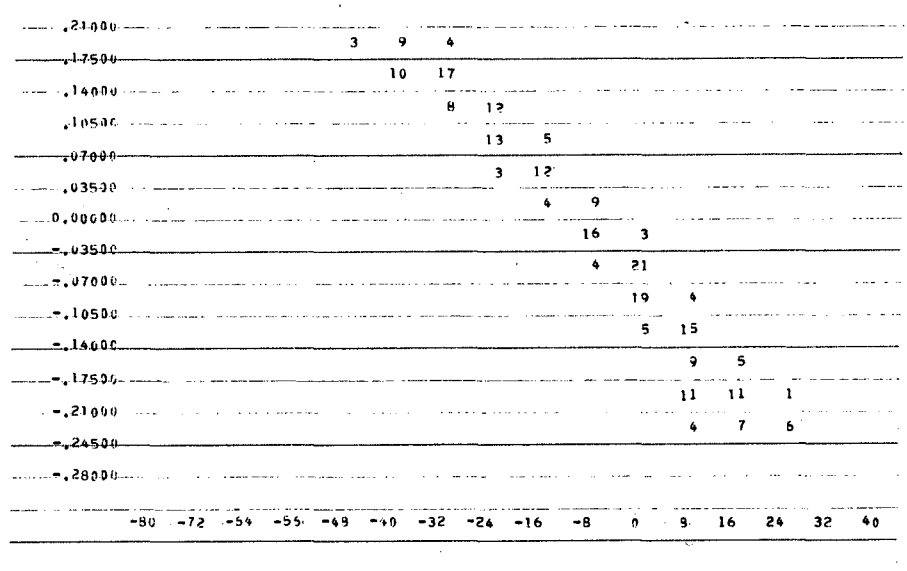
.21000
.17500
.14000
.10500
.07000
.03500
0.00000
-.03500
-.07000
-.10500
-.14000
-.17500
-.21000
-.24500
-.28000
-80 -72 -54 -55 -48 -40 -32 -24 -16 -8 0 8 16 24 32 40

Fig. 5

0 0 0 3 4 2 0 4 3 3 3

LEGAL NOTICE

This report was prepared as an account of work sponsored by the United States Government. Neither the United States nor the United States Energy Research and Development Administration, nor any of their employees, nor any of their contractors, subcontractors, or their employees, makes any warranty, express or implied, or assumes any legal liability or responsibility for the accuracy, completeness or usefulness of any information, apparatus, product or process disclosed, or represents that its use would not infringe privately owned rights.

TECHNICAL INFORMATION DIVISION
LAWRENCE BERKELEY LABORATORY
UNIVERSITY OF CALIFORNIA
BERKELEY, CALIFORNIA 94720