0 0 0 0 4 2 0 4 5 3 5

To be presented at the IEEE Particle Accelerator Conference, Washington, DC, March 12-14, 1975

LBL-3370
c.1

DIGITAL CONTROLLED FREQUENCY FOR SYNCHROTRON ACCELERATION

M. Clinnick, J. Greer, J. Guggemos,
R. Kilgore, and D. Rondeau

February 1975

Prepared for the U. S. Atomic Energy Commission
under Contract W-7405-ENG-48

For Reference

Not to be taken from this room

LAWRENCE BERKELEY LABORATORY
UNIVERSITY OF CALIFORNIA
BERKELEY

LBL-3370
c.1

DISCLAIMER

This document was prepared as an account of work sponsored by the United States Government. While this document is believed to contain correct information, neither the United States Government nor any agency thereof, nor the Regents of the University of California, nor any of their employees, makes any warranty, express or implied, or assumes any legal responsibility for the accuracy, completeness, or usefulness of any information, apparatus, product, or process disclosed, or represents that its use would not infringe privately owned rights. Reference herein to any specific commercial product, process, or service by its trade name, trademark, manufacturer, or otherwise, does not necessarily constitute or imply its endorsement, recommendation, or favoring by the United States Government or any agency thereof, or the Regents of the University of California. The views and opinions of authors expressed herein do not necessarily state or reflect those of the United States Government or any agency thereof or the Regents of the University of California.

LBL-3370

DIGITAL CONTROLLED FREQUENCY FOR SYNCHROTRON ACCELERATION*

1975 Particle Accelerator Conference

M. Clinnick, J. Greer, J. Guggemos,
R. Kilgore, D. Rondeau
Lawrence Berkeley Laboratory
University of California
Berkeley, California

Summary

The ability of synchrotrons to accelerate particles with different e/m_0 values is dependent upon being able to control its accelerating-voltage frequency as a function of the actual guide field value. Interpolation between modification values can be performed to reduce the possibility of exciting phase oscillation. Differences between the desired frequency and the actual frequency produced (due to non-linearities in the system) are also removed with the digital processor increasing the precision of the system up to two orders of magnitude. Successful operation with six different particles has been demonstrated.

Introduction

The increasing interest in the use of high energy light/heavy ions for biomedical research has produced new demands for advancement in accelerator technology, this in turn causes a need for more complicated control systems. The ability of a synchrotron to accelerate particles with different charged to mass ratios e/m_0 values is dependent upon the ability to control its accelerating voltage frequency as a function of the guide field. The advent of the Bevalac was no exception, where the e/m_0 ratio would range from 1 to approximately 0.4. A method has been developed that allows the Bevatron to operate with a predetermined theoretical value of acceleration frequency as a function of the guide field. A digital processor is used to precalculate the theoretical frequency as a function of machine parameters, particle e/m_0 value and store these values in a memory unit. The acceleration frequency is controlled from memory with desired perturbations provided by the operator and/or radial feedback.

Design Philosophy

The old Analog Master Oscillator (AMO)was replaced by a Voltage Controlled Oscillator (VCO). The controled voltage for the VCO is developed by a digital to analog converter (DAC) where the new digital value to the DAC is modified at each incremental change in the guide field. The digital value for the DAC is the digital summation of the theoretical value in memory, any perturbation the operator wishes to introduce, and a closed loop radial position signal when desired. The values of the acceleration frequency for the Bevatron for a given e/m_0 value, guide field B value, and radius of orbit, can be calculated using the following equation:

$$F = \frac{c}{[2\pi(R_0+\Delta R)+4S]\left[1+\left(\frac{m_0 c}{eB[R_0+(1-N)\,\Delta R]}\right)^2\right]^{\frac{1}{2}}} \qquad (1)$$

Where
- F = acceleration frequency in Hz
- c = the speed of light
- R_0 = the radius of the Bevatron
- ΔR = change in radius during acceleration.
- S = length of a straight section in the Bevatron
- m_0 = rest mass of the particle
- e = the electron charge of the particle
- B = the guide field in gauss
- N = N value of the Bevatron.

The Bevatron guide field changes at the rate of 10 G/ms at injection, with a corresponding 1.2 kHz/G change in the acceleration frequency. The guide field varies from approximately 37 G residual field to 15 kG at peak field, at a corresponding proton energy of 6.3 GeV. The range of acceleration frequency is from 120 kHz to 2.5 MHz.

In order to get the desired resolution needed for the acceleration frequency, a 16-bit DAC was selected providing a resolution of 1 part in 64,000 or 40 Hz/LSB. The acceleration frequency must be updated every gauss in order to maintain the accelerated beam at the correct radius, requiring 16K of memory for the acceleration of an ion to full energy.

Accelerated ions are extracted from the Bevatron at the desired energy by means of resonant extraction. One requirement of the resonant extraction is that the guide field must be maintained at the desired value ±½ G to prevent the particle from receiving an energy change as well as preventing any structure on the extracted beam. To accomplish this a 1-s flat top is provided in the main guide field. The accelerator frequency is left on to provide control during the first 100 ms of the flat top for positioning of the beam at the correct radius for resonant extraction. Because of this requirement, the signal for the DAC becomes a function of time instead of guide field and is updated in 1-ms increments instead of 1-G increments. An additional 16K of memory is provided for this use.

Another requirement for the Bevatron during Bevalac operation is the ability to time share between two ions with different e/m_0 ratios. Each ion requires 16K x 16 bits of memory with an additional 16K of memory used for intermediate values in the linearization calculations and to store open loop variations introduced by the operator and/or radial feedback.

System Configuration and Design

The digital control frequency for the Bevatron is a system known as the Digital Master Oscillator (DMO) and is a portion of the Bevatron accelerating voltage frequency control system (see Fig. 1). The following equipment was used with the Analog Master Oscillator and has been adapted for use with the DMO. The digital processor is a DEC PDP-8 with 4K x 12 bit of memory, with access to a 12 megabit disc. The PDP-8 has a positive I/O bus for interfacing to the digital hardware. Because of the physical distribution of the hardware within the Bevatron, both serial and parallel digital links are used. The serial links are Pulsed Duration Modulation (PDM); and encoded, self-clocking 1 MHz serial transmission system that is used extensively throughout the Bevatron.

The operator control panel is a means by which the Bevatron operator can enter open loop corrections as

* Work performed under the auspices of the U. S. Energy Research and Development Administration.

desired or needed at a 1-ms rate. The waveforms that can be generated are those that take the basic shape of a trapezoid or parabola. The signals amplitude, time, and slope of four trapezoids or parabolas can be controlled with their starting position being a function of guide field value or time. The radial feedback system provides two signals to the processor which are a function of the "in and out" deviation of the ion beam from the desired radius. This system is only useful for ion intensities of 10^9 charges and greater. The phase feedback system compare the phase of the ion beam to the accelerating frequency at the accelerating electrode and produces a signal proportional to the phase difference of these two signals. The phase signal is used to reduce phase oscillations of the beam, and is only useful with ion intensities of 10^7 charges and greater.

Some of the timing considerations for the Bevatron are that it has a basic rep rate of 10 pulses per minute, an accelerating time of up to 1800 ms, depending on the energy desired. The resonant extraction time, or flat top, can be up to two seconds long, and is a function of the ion energy desired and limited by the power demand of the system. The time between pulses is equal to or greater than 600 ms. Injection into the Bevatron takes place between 200 G and 800 G, depending upon the source of ions or protons being used.

The value of the guide field is obtained by doing a digital integration of the $\dot{B}$ voltages as obtained by the $\dot{B}$ winding placed in the beam aperture. The sign magnitude voltage output of the winding is converted to a pair of pulses with a voltage to frequency converter. The frequency of the pulses is proportional to the $\dot{B}$ voltage and has a value of 1 cG/pulse. The pulses are integrated in an up/down BCD scaler. The contents of the scaler contains the value of the guide field in cG. The $\dot{B}$ winding can only detect a change in field thus the scaler must have the value of the residual field added approximately 20-ms before a Bevatron cycle starts. The residual field is measured using a small peaking strip with a bias winding inserted in the Bevatron aperture.

The DMO makes use of all the signals generated for the AMO for correction and control. The accelerating frequency is generated using a voltage controlled oscillator which has the following minimum specifications:

Frequency range of 100 kHz to 2.5 MHz
Frequency modulation <40 Hz at a 60 Hz rate
Slew rate of 15 MHz/s
Linearity of 0.01%
Low short term drift <100 Hz/s

Two Hewlett-Packard voltage controlled oscillators were selected for use. One was a hetrodyne VCO meeting all the specs desired, the second unit was an integrating VCO and was selected because it had very low frequency modulation, but had a linearity of about 0.1%. The VCO is driven by a summing amplifier with four inputs. The output of the VCO goes to the 150 kW final amplifier for ion acceleration and to a Hewlett-Packard frequency to digital converter, providing an input to the processor for diagnostics. An external memory with up to 64K is provided to store the theoretical frequency values. The memory address register is incremented or decremented by the 1 G field markers. The processor is used to calculate the theoretical value of the accelerated frequency for each G incremenet using equation (1), dividing by 40 Hz/bit and storing in memory. Each time the memory address register is incremented the contents of the memory is transmitted to the 16 bit DAC, after being modified in the digital summation hardware. In the digital summation hardware the least significant 12 bits can be modified either by radial feedback information and/or open loop correction by the operators.

The residual field of the Bevatron is approximately 37 G, and is dependent on peak field and rep rate. The first 100 gauss words in the memory are loaded with the theoretical value of frequency for 100 G. At the time the residual field value is being loaded to the memory address register, all other inputs to the summing amplifier are zeroed, and the 100 G frequency value is sent to the 16 bit DAC and the output of the VCO is measured with the frequency to digital converter. Any drift from the 100 G frequency is calculated and a correction is sent to the 12-bit DAC. If the drift correction is too great and error message is sent to the operators. The operator can also add a modifier to the residual and drift values providing him with a fine control of the initial frequency. Incrementing the residual field displaces the frequency curve, with respect to the guide field, while incrementing the drift value provides an offset. (See Fig. 2).

Results

Initial operation with the hetrodyning voltage control oscillator works successfully only if the phase feedback is used. The inherent frequency modulation was sufficient to excite phase oscillation, causing a continuous loss of beam after the first 100 ms of acceleration. The integrating voltage control oscillator would only accelerate the beam for the first few 100 ms before the beam was lost due to radial error. The use of radial feedback and phase feedback, provided successful acceleration. Phase feedback is needed when using radial feedback, because the 1 ms update of the radial system tends to excite phase oscillation, especially if the value of the radial correction gets large. The DMO has the ability to use the learned curve concept. The output of the digital summation is written into a second 16 K block of memory. On the following Bevatron pulse, the VCO is programmed by this new curve, containing the radial feedback signal as well as any operator corrections, reducing the requirements of the radial system. The learned curve concept can be applied a second or third time, if needed, producing a very high gain system. Making use of the learned curve concept allowed successful acceleration using the integrating voltage controlled oscillators with phase feedback (phase feedback was still needed because of a 1 ms update of the radial feedback system).

A method of interpolating between modified values was developed, where the correction value is divided into 10 parts and added every G, reducing the correction steps, however, this method has not been thoroughly tested at this time.

The need to remove the non-linearities of the integrating VCO and the rest of the system led to the linearization concept. After the processor has calculated the theoretical frequency curve, all the inputs to the summation amplifier are zeroed and the processor then increments the memory address register through its range and measures the frequency value with the frequency to digital converter. The difference between the theoretical values and the measured values is an error value that can be added to the calculated theoretical value and stored in a 16K block of memory. This new value produces a frequency that is much closer to the desired theoretical value. The process can be repeated a second time resulting in the output of

the integrating VCO being linear to the desired 0.01%. The equaitons for the values stored in the memory are

$$L1 = 2T-M1 \quad \text{for the first correction} \qquad (2)$$
$$L2 = 3T-M1-M2 \quad \text{for the second correction} \qquad (3)$$
$$L2 = T-M2+L1$$

Where:

T = theoretical value
M1 = first measured value
M2 = second measured value
L1 = first linearized value
L2 = second linearized value.

This method takes approximately three minutes of off line processor time, being limited by the response time of the frequency to digital converter. It has the advantage that the incremental correction in frequency take place at every gauss increment instead of every 10 gauss, and non-linearities for the complete system are removed (see Fig. 3).

Conclusion

Successful operation of the Bevalac has been achieved with six light heavy ions from protons up to $^{40}Ar^{+18}$ with $^{84}Kr^{+36}$ scheduled in the near future. Digital control of the accelerating frequency can be applied to any synchrotron to accelerate particles with different e/m_0 values as long as the theoretical value of the accelerating frequency can be accurately defined as a function of the guide field for the accelerator. Additional work remains to reduce the FM noise within the system in order to be able to accelerate ions of lower intensities as the use of phase feedback still yields significant improvement in the Bevatron performance.

Acknowledgements

The authors wish to acknowledge Don M. Evans who developed the original concept of the DMO and Fred Lothrop who assisted with Bevatron operations during development of the system.

References

1. D. M. Evans et al, Advancements in Control Technology at the Bevatron, IEEE Tra. Nu Sc June 1973.
2. D. M. Evans, F. Lothrop, Digital Control of Bevatron Acceleration Cycle, IEEE Trs. Nu Sc., June 1971.
3. J. R. Guggemos, D. J. Rondeau, Modern Control Technology with Model T Computers, Decus Proc. Fall 1973.
4. J. Barale et al, Performance of the Bevalac, as given at the 1975 Particle Accelerator Conference, Washington, D.C.

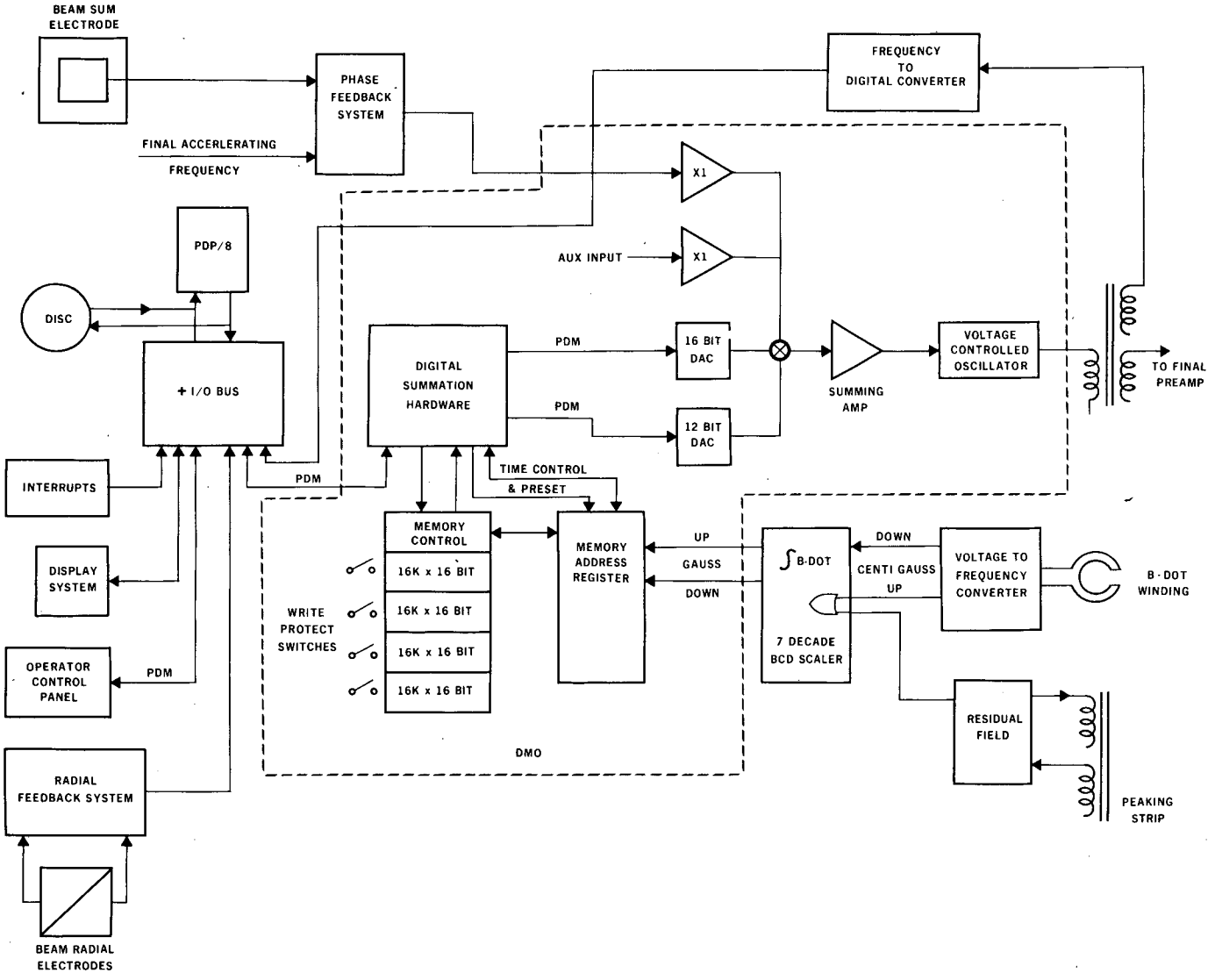

FIGURE 1. BEVATRON ACCELERATING - VOLTAGE FREQUENCY CONTROL SYSTEM

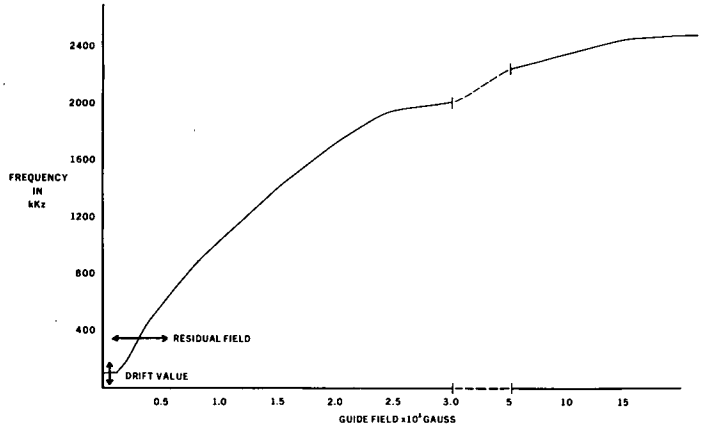

FIGURE 2. ACCELERATION FREQUENCY vs. GUIDE FIELD

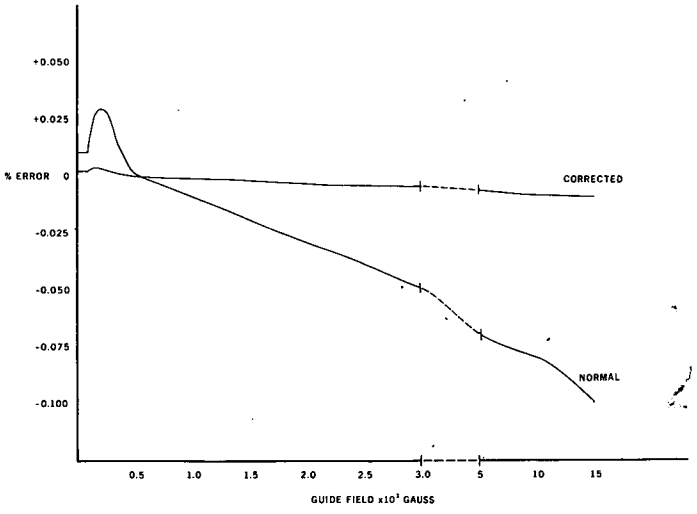

FIGURE 3. NORMALIZED ERROR CURVE

XBL 753-566a

0 0 0 0 4 2 0 4 3 3 9

LEGAL NOTICE

This report was prepared as an account of work sponsored by the United States Government. Neither the United States nor the United States Atomic Energy Commission, nor any of their employees, nor any of their contractors, subcontractors, or their employees, makes any warranty, express or implied, or assumes any legal liability or responsibility for the accuracy, completeness or usefulness of any information, apparatus, product or process disclosed, or represents that its use would not infringe privately owned rights.

TECHNICAL INFORMATION DIVISION
LAWRENCE BERKELEY LABORATORY
UNIVERSITY OF CALIFORNIA
BERKELEY, CALIFORNIA 94720