LBL-33886
UC-404

Lawrence Berkeley Laboratory
UNIVERSITY OF CALIFORNIA

Materials Sciences Division

National Center for Electron Microscopy

Presented at the Eighth Oxford Conference on Microscopy
of Semiconducting Materials, Oxford, England,
April 5–8, 1993, and to be published in the Proceedings

Changes in Electrical Device Characteristics During the Formation of Dislocations *in situ* in the TEM

F.M. Ross, R. Hull, D. Bahnck, J.C. Bean, L.J. Peticolas,
C.A. King, and R.R. Kola

March 1993

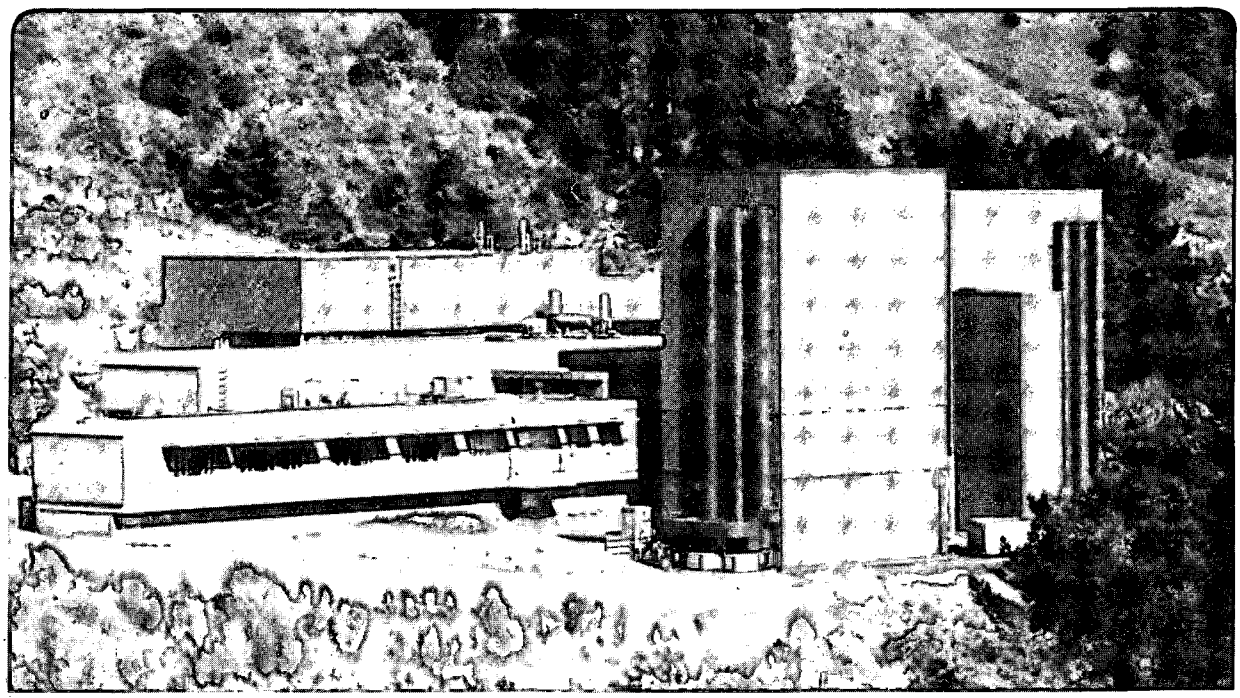

REFERENCE COPY
Does Not
Circulate
Bldg. 50 Library.
LBL-33886
Copy 1

Prepared for the U.S. Department of Energy under Contract Number DE-AC03-76SF00098

DISCLAIMER

This document was prepared as an account of work sponsored by the United States Government. Neither the United States Government nor any agency thereof, nor The Regents of the University of California, nor any of their employees, makes any warranty, express or implied, or assumes any legal liability or responsibility for the accuracy, completeness, or usefulness of any information, apparatus, product, or process disclosed, or represents that its use would not infringe privately owned rights. Reference herein to any specific commercial product, process, or service by its trade name, trademark, manufacturer, or otherwise, does not necessarily constitute or imply its endorsement, recommendation, or favoring by the United States Government or any agency thereof, or The Regents of the University of California. The views and opinions of authors expressed herein do not necessarily state or reflect those of the United States Government or any agency thereof or The Regents of the University of California and shall not be used for advertising or product endorsement purposes.

Lawrence Berkeley Laboratory is an equal opportunity employer.

DISCLAIMER

This document was prepared as an account of work sponsored by the United States Government. While this document is believed to contain correct information, neither the United States Government nor any agency thereof, nor the Regents of the University of California, nor any of their employees, makes any warranty, express or implied, or assumes any legal responsibility for the accuracy, completeness, or usefulness of any information, apparatus, product, or process disclosed, or represents that its use would not infringe privately owned rights. Reference herein to any specific commercial product, process, or service by its trade name, trademark, manufacturer, or otherwise, does not necessarily constitute or imply its endorsement, recommendation, or favoring by the United States Government or any agency thereof, or the Regents of the University of California. The views and opinions of authors expressed herein do not necessarily state or reflect those of the United States Government or any agency thereof or the Regents of the University of California.

LBL-33886

Changes in Electrical Device Characteristics During the Formation of Dislocations *in situ* in the TEM

F.M. Ross*, R. Hull, D. Bahnck, J.C. Bean, L.J. Peticolas, C.A. King & R.R. Kola

*Materials Science Division
National Center for Electron Microscopy
Lawrence Berkeley Laboratory
University of California, Berkeley, CA 94720

AT&T Bell Laboratories
600 Mountain Avenue
Murray Hill, N.J. 07974

Proc. 8th Oxford Conf. on Microscopy of Semiconducting Materials
Oxford, England, 4/5-4/8/93

This work was supported in part by the Director, Office of Energy Research, Office of Basic Energy Sciences, Materials Science Division of the U.S. Department of Energy under Contract No. DE-AC03-76SF00098.

Changes in electrical device characteristics during the formation of dislocations *in situ* in the TEM

F. M. Ross*, R. Hull, D. Bahnck, J. C. Bean, L. J. Peticolas, C. A. King and R. R. Kola

AT&T Bell Laboratories, 600 Mountain Avenue, Murray Hill, NJ 07974, USA
*Lawrence Berkeley Laboratory, 1 Cyclotron Road, Berkeley, CA 94720, USA

ABSTRACT: By adding electrical connections to a specimen heating holder for a transmission electron microscope, we have measured the characteristics of electronic devices such as diodes while they remain under observation in the microscope. We have made electron-transparent specimens from metastable GeSi/Si p-n junction diodes and introduced dislocations by heating *in situ*. The combination of electrical measurement and real-time observation of dislocation formation allows us to examine the electrical properties of dislocations in individual devices and the influence of defects on device performance.

1. INTRODUCTION

The presence of structural defects in a semiconductor is known to be associated with poor performance in electronic devices fabricated from the material (Sze 1985). Although the relationship between material perfection and device performance is usually only considered for the case of defects in single crystal substrates, it also applies, of course, to any defects which may be introduced during the growth, patterning and operation of devices. We are particularly interested in the effects of misfit dislocations on the properties of devices made using strained layer epitaxy, and in this paper we describe experiments designed to probe the relationship between the formation of misfit dislocations and the performance of such devices.

The equilibrium critical thickness theory of Matthews and Blakeslee (1974) predicts that if a strained film is grown epitaxially onto a mismatched substrate, at a critical film thickness, h_c, it becomes energetically favourable for the epilayer to relax by the formation of misfit dislocations at the substrate-epilayer interface. For the layer thicknesses and lattice mismatch often necessary in semiconductor devices, this can result in the introduction of dislocations into active regions of structures and poor performance in, for example, III-V optoelectronic devices. Rather than considering complex structures, we have investigated the effect of misfit dislocations on simple devices fabricated in a model system. We have made p-n junction diodes from metastable GeSi/Si heterostructures, with the GeSi epilayers chosen to be above h_c so that dislocation formation is energetically favoured and will occur upon heating the material. By forming electron-transparent regions in the devices, we can observe the density of dislocations during heating *in situ* in a TEM. These *in situ* heating experiments are extremely interesting in themselves, as dynamical dislocation processes (such as movement, nucleation, and interaction) are visible (Hull et al. 1988). However, to investigate the electrical properties of the dislocations we also need a method of recording the electrical characteristics of the specimen. We have done this by adding electrical feedthroughs to the specimen holder so that a curve tracer can be connected across the device without taking it out of the microscope. We can therefore measure the progressive change in parameters such as the reverse leakage current as dislocations are introduced.

We have used the results of these experiments to investigate the electronic properties of the dislocations, as well as to study the kinetics of the relaxation process in lithographically patterned and unpatterned structures. We find that a generation-recombination process (Sze 1985) occurring at the dislocation cores does not adequately explain the changes we observe in

device characteristics, and we suggest that electrical changes due to the introduction of dislocations are related to the creation of point defects or the diffusion of impurities such as metals during dislocation formation. We also describe the kinetics of the relaxation process and discuss the strong dependence it has on the processing steps used to fabricate a device.

2. ELECTRICAL MEASUREMENTS IN THE TEM

Our experiments were carried out in a JEOL 2000FX electron microscope equipped with a Gatan image intensifier and a video recording system. The specimen holder we used is shown in figure 1. We modified a Gatan single-tilt heating holder by adding a top surface electrical contact via a Ta wire ring and a lower contact through the furnace itself (Ross et al. 1993). The temperature was measured using a Pt thermocouple which has been calibrated to within 30°C (Hull et al. 1991). The design of this holder is ideal for measuring the electrical properties of specimens fabricated in the plan view geometry. A suitable device consists of a p-type GeSi layer on an n-type Si substrate; some diodes also had a p-type Si capping layer. All the structures were grown by molecular beam epitaxy at a substrate temperature of 550°C and a rate of about 1 monolayer per second, using 3 keV ion beam doping. Doping levels were chosen so that the depletion region at zero bias extended about half way through the GeSi layer; the GeSi layer thicknesses chosen were above h_c, but not so much greater that significant relaxation occurred during growth. Upon heating the specimens, the movement of dislocations was clearly visible in electron-transparent regions formed by back etching with HF/HNO_3. These dislocations propagate in 110 directions in the plane of the GeSi/Si interface (Hirth and Lothe 1968), forming an orthogonal array, and the interfacial misfit segments are connected to the surface (or to another dislocation) by a threading arm.

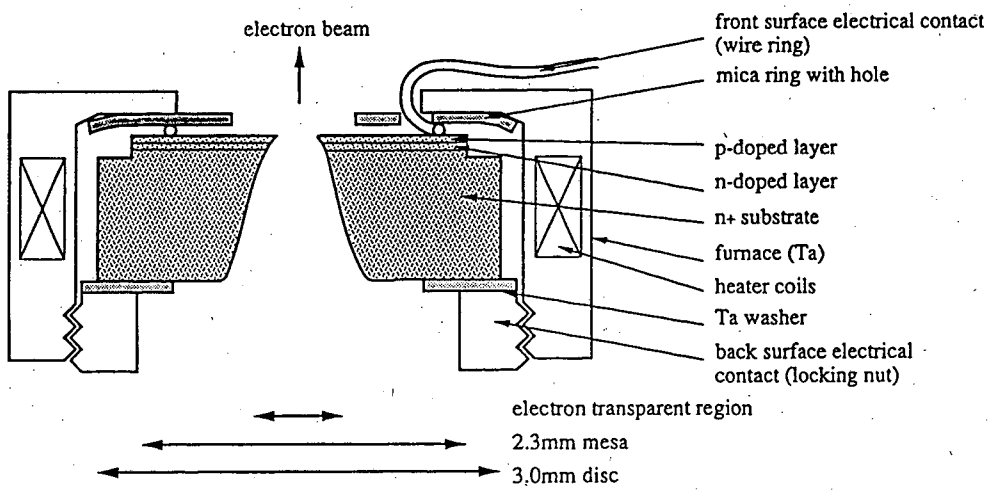

Figure 1. Schematic diagram of a p-n diode specimen in the specimen holder. Vertical dimensions are exaggerated for clarity.

3. ELECTRICAL PROPERTIES OF DISLOCATIONS

We find that the growth of dislocations during heating *in situ* is correlated with a degradation in the electrical characteristics of these diodes. Figure 2 shows that the reverse leakage current increases with the defect density, and that control structures with no Ge do not show this effect, demonstrating that these electrical changes are associated with the formation of misfit dislocations.

The effects we observe are not due to the threading arms acting as "short circuits" through the depletion region, because this would not lead to proportionality between leakage current and dislocation length. We have therefore modeled the misfit segments themselves as generation sources for carriers in the depletion region (Oldham and Milnes 1964). Our experiments show that each dislocation generates 10^{-5} - 10^{-4} A per meter of misfit length, or about 10^4 - 10^5 electrons per Å per second (this number is given at -5V but is somewhat

dependent on reverse bias voltage). Application of the Shockley-Read-Hall theory (see for example Sze 1985) then enables us to calculate the number of sources of electron-hole pairs (traps) which must be present to generate this leakage current, given values for the capture cross section and energy of the traps, and thus in principle address the issue of whether special sites at or around the dislocation lines, such as kink sites, are responsible for the generation of electron-hole pairs.

Both cross section and trap energy will be affected by the degree of dissociation and the possibility of decoration by metal impurities. However, reasonable values in silicon (Patel and Kimmerling 1981; Sze 1985) lead to surprisingly high values of N_t, typically 10^5 traps per nanometer of misfit line length. This is greater than the total number of potential sites along the misfit segments by a factor of 10^4 to 10^5, and it is therefore clear that a model in which the only sources are special sites along the dislocation cores can not explain these data. This large number of traps is therefore distributed over an extended volume around the cores and may thus be associated with point defects around the dislocations. Alternatively they may be associated with point defects remaining after the passage of the threading arms through the material; EPR studies suggest that high point defect densities are in fact present following the motion of dislocations (Kisielowski-Kemmerich and Alexander 1986). Even in this case, however, given the depletion layer widths in our materials there is still a shortfall of potential sites unless the disturbed region is very thick.

However, the presence of metal impurities is likely to be of even greater importance in these experiments. Even low levels of metal impurities are known to alter the electrical activity of dislocations significantly, as observed for example by cathodoluminescence (Higgs et al. 1992) and electron beam induced current (Radzimski et al. 1992). Thus diffusing metal species may decorate the planes of the threading arms or the dislocation cores, giving rise to traps with different cross sections and energy levels. We are presently attempting to determine the energy levels of traps associated with the dislocations in these GeSi/Si diodes, and we are also carrying out experiments in which the GeSi/Si interface is placed at different distances from the depletion region, so that the effects of the threading arms and the misfit segments can be examined separately.

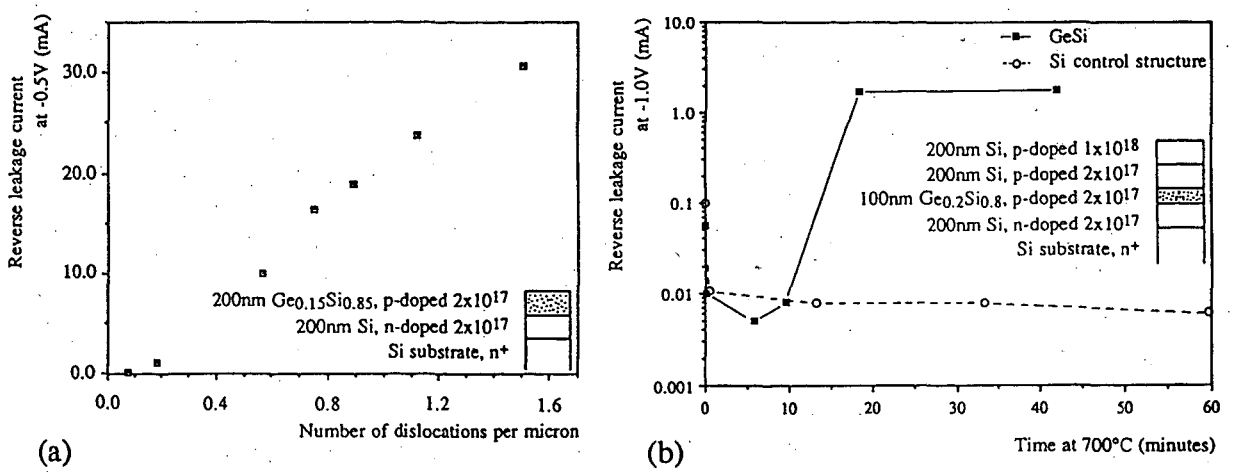

Figure 2 (a) Dislocation density against reverse leakage current for a 3mm diameter ultrasonically cut diode. The number of dislocations cutting a line is an average over several fields of view, and the current was measured at a fixed reverse voltage through the whole device. A dislocation density of $16\mu m^{-1}$ would correspond to complete relaxation: even prolonged heating does not lead to relaxation of more than 10-20% of the strain.
(b) The increase in reverse leakage current upon heating *in situ*, compared for a diode of the structure shown and an unstrained control structure. The initial improvement of the diode trace by a short anneal may be due to the removal of point defects produced during ion beam doping.

4. DEVICE PROCESSING AND DISLOCATION FORMATION

The relationship between dislocation formation and device performance is significant not just in the GeSi/Si system we have discussed here but also for III-V devices, for example in the

formation of dark line defects in the active regions of laser structures (e.g. Grovenor 1989). It is clear that the kinetics of dislocation nucleation and growth, particularly their dependence on the patterning process which a strained heterostructure undergoes as it is fabricated into a working device, are extremely important.

We find that for these devices the nucleation of dislocations dominates the relaxation kinetics. Dislocations appear to nucleate from edges and surface irregularities in most of the materials we have examined, and the presence of a capping layer increases the stability. We also find that patterning has a very strong influence on stability. Etched, metallised diodes show a surprising stability to dislocation formation upon heating (Ross et al. 1993). As well as the areal reduction in the nucleation opportunities for dislocations which occurs when a mesa is formed (Fitzgerald et al. 1988, 1990), we also believe that the stress in the metallisation layer, particularly at the mesa edges, may diminish or remove the driving force for the formation or motion of dislocations. We have compared the relaxation kinetics of GeSi/Si heterostructures on which compressive and tensile W layers have been sputtered, and find that the sign of the stress in the metal overlayer can alter both the onset of relaxation and the ultimate dislocation density (Ross et al. 1993). We are at present carrying out finite element calculations to model this effect, and are very interested in the possibility that the stability of strained materials may be improved by an appropriate choice of processing conditions.

5. CONCLUSIONS

We have measured diode characteristics and dislocation behaviour simultaneously during the relaxation of strained layer p-n junction diodes in the TEM and found a strong correlation between electrical degradation and the formation of misfit dislocations. We suggest that in our system electrically active defects are distributed widely around dislocation cores, or that the motion of threading arms is a significant feature of the degradation process, in terms of the creation of defects or the diffusion of metal impurities into the depletion region. It is clear that the opportunities for dislocation nucleation have a dominant role in determining the overall relaxation kinetics of metastable structures. The way in which a strained layer material is fashioned into a device is significant in determining the density of dislocations, and therefore the electronic quality of the finished result.

We would like to acknowledge valuable discussions with Janet Benton and Simon L. King. This work was supported by the Director, Office of Energy Research, Office of Basic Energy Sciences, Materials Science Division, U. S. Department of Energy under contract No. DE AC-03-76SF00098.

E. A. Fitzgerald, P. D. Kirchner, R. Proano, G. D. Pettit, J. M. Woodall and D. G. Ast, Appl. Phys. Lett. **52**, 1496 (1988)

E. A. Fitzgerald, Y.-H. Xie, D. Brasen, M. L. Green, J. Michel, P. E. Freeland and B. E. Weir, J. Electronic Materials **19**, 949 (1990)

C. R. M. Grovenor, *Microelectronic Materials*, Adam Hilger, Bristol (1989)

V. Higgs, M. R. Goulding, A. Brinklow and P. Kightley, Appl. Phys. Lett. **60**, 1369 (1992)

J. P. Hirth and J. Lothe, *Theory of Dislocations*, McGraw-Hill, N. Y. (1968)

R. Hull, J. C. Bean, D. J. Werder and R. E. Leibenguth, Appl. Phys. Lett. **52**, 1605 (1988)

R. Hull, J. C. Bean, D. Bahnck, L. J. Peticolas, K. T. Short and F. C. Unterwald, J. Appl. Phys. **70**, 2052 (1991)

C. Kisielowski-Kemmerich and H. Alexander, in *Proc. V International Symposium on Structure and Properties of Dislocations in Semiconductors*, Moscow (1986)

J. W. Matthews and A. E. Blakeslee, J. Cryst. Growth **27**, 118 (1974); **32**, 265 (1974)

W. Oldham and A. Milnes, Solid State Electronics **7**, 153 (1964)

J. R. Patel and L. C. Kimmerling, Crystal Research and Tech. **16**, 187 (1981)

Z. J. Radzimski, T. Q. Zhou, A. Buczkowski, G. A. Rozgonyi, D. Finn, L. G. Hellwig and J. A. Ross, Appl. Phys. Lett. **60**, 1096 (1992)

F. M. Ross, R. Hull, D. Bahnck, J. C. Bean, L. J. Peticolas and C. A. King, to appear in Appl. Phys. Lett. **62**, 1426 (1993)

F. M. Ross, R. Hull, D. Bahnck, J. C. Bean, L. J. Peticolas, R. R. Kola and C. A. King, to appear in Mat. Res. Soc. Proc. **280** (1993)

S. M. Sze, *Semiconductor Devices: Physics and Technology*, Wiley, N.Y. (1985)

LAWRENCE BERKELEY LABORATORY
UNIVERSITY OF CALIFORNIA
TECHNICAL INFORMATION DEPARTMENT
BERKELEY, CALIFORNIA 94720