LBl-33983
UC-414
Preprint

Lawrence Berkeley Laboratory
UNIVERSITY OF CALIFORNIA

Physics Division

Presented at the Materials Research Society Symposium, San Francisco, CA, April 12–16, 1993, and to be published in the Proceedings

Utilization of a-Si:H Switching Diodes for Signal Readout from a-Si:H Pixel Detectors

G. Cho, J.S. Drewery, W.S. Hong, T. Jing, H. Lee, S.N. Kaplan, A. Mireshghi, V. Perez-Mendez, and D. Wildermuth

April 1993

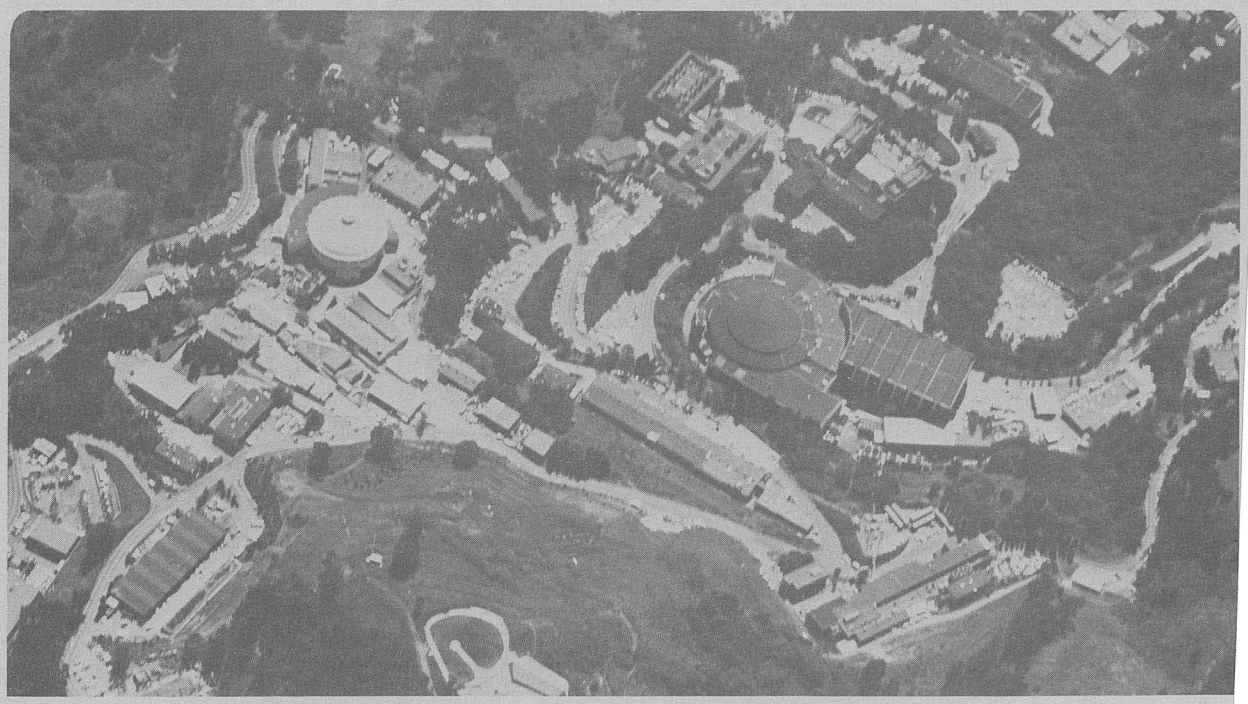

LOAN COPY
Circulates
for 4 weeks
Bldg. 50 Library.
LBL-33983
Copy 2

Prepared for the U.S. Department of Energy under Contract Number DE-AC03-76SF00098

DISCLAIMER

This document was prepared as an account of work sponsored by the United States Government. While this document is believed to contain correct information, neither the United States Government nor any agency thereof, nor the Regents of the University of California, nor any of their employees, makes any warranty, express or implied, or assumes any legal responsibility for the accuracy, completeness, or usefulness of any information, apparatus, product, or process disclosed, or represents that its use would not infringe privately owned rights. Reference herein to any specific commercial product, process, or service by its trade name, trademark, manufacturer, or otherwise, does not necessarily constitute or imply its endorsement, recommendation, or favoring by the United States Government or any agency thereof, or the Regents of the University of California. The views and opinions of authors expressed herein do not necessarily state or reflect those of the United States Government or any agency thereof or the Regents of the University of California.

LBL-33983

Utilization of a-Si:H Switching Diodes for Signal Readout from a-Si:H Pixel Detectors

G. Cho, J.S. Drewery, W.S. Hong, T. Jing, H. Lee, S.N. Kaplan,
A. Mireshghi, V. Perez-Mendez and D. Wildermuth

Physics Division
Lawrence Berkeley Laboratory
University of California
Berkeley, CA 94720

April 1993

This work was supported by the Director, Office of Energy Research,
Office of High Energy and Nuclear Physics, Division of High Energy Physics
of the U.S. Department of Energy under Contract No. DE-AC03-76SF00098.

UTILIZATION OF a-Si:H SWITCHING DIODES FOR SIGNAL READOUT FROM a-Si:H PIXEL DETECTORS

Gyuseong Cho, J.S. Drewery, W.S. Hong, T. Jing, H. Lee, S.N. Kaplan,
A. Mireshghi, V. Perez-Mendez, and D. Wildermuth,
Lawrence Berkeley Laboratory, Berkeley, CA, 94720

ABSTRACT

Two-dimensional arrays of amorphous silicon photodiodes can be used as position-sensitive radiation detectors when they are coupled to an appropriate phosphor. We have developed signal readout schemes from amorphous silicon photodiode arrays utilizing one or two switching diodes attached to each pixel photodiode. Individual cells and prototype arrays of amorphous silicon photodiodes with single- and double-diode switching readout were fabricated and tested. A charge storage time and a readout time were measured. The measurement results were analyzed by simple circuit theory.

INTRODUCTION

Hydrogenated amorphous silicon(a-Si:H) diodes has been used for radiation detectors for X-rays, gamma rays and other charged particles.[1,2] Despite the poorer electronic characteristics of a-Si:H compared to crystalline silicon, it has the strong advantages of enabling the construction of large-area devices easily and inexpensively. Also it has been shown [3] that this material has a much higher radiation-resistance compared to the crystalline material.

Two-dimensional (pixel) arrays of photodiodes for X-ray imaging conventionally use a-Si:H TFTs as switching elements. Schematics of the array and the element are shown in Fig. 1. and Fig. 2. (a) [4] The signal charges generated by photons are first stored in each pixel detector capacitance during the first part of the scanning cycle. Then in the second part of the cycle, the stored charges are sent to an external multi-signal processor in a row through switching transistors when a gate pulse is applied sequentially. K. Yamamoto et al. [5] also have made 2-d image sensors using single-diode switches as a replacement for TFTs; its schematic is shown in Fig. 2 (b).

TFT switching seems to be better for controlling the detector bias and in avoiding the cross-talk between pixels, but it requires a more complicated fabrication process including the additional deposition of a high quality gate dielectric layer(Si_3N_4 or SiO_2).

Single-diode switching has the advantage that the switching diodes use the same p-i-n layers as the photodiode. Therefore the number of masks required in lithography will be reduced. However this method

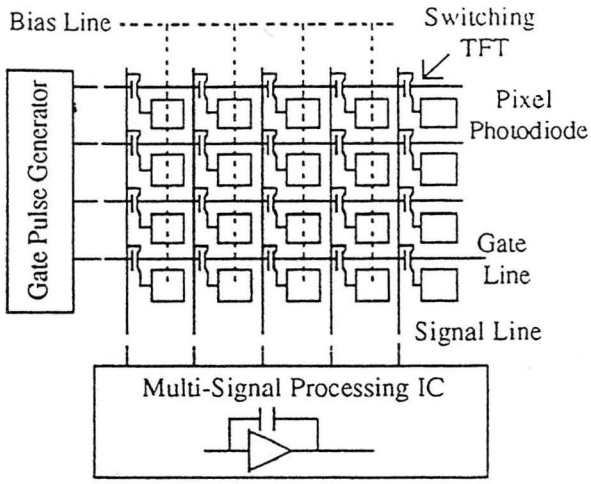

Fig. 1. Schematic diagram of a-Si:H pixel detector array using TFT switches.

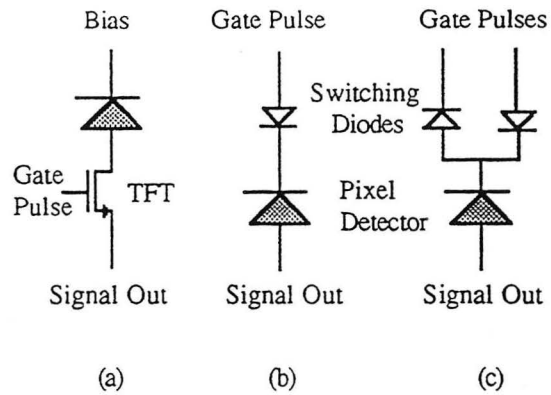

Fig. 2. Realization of pixel switches with (a) TFT, (b)single- and (c) double-diode.

intrinsically possesses some problems such as a large switching-transients as well as the uncontrollability of the photodiode bias level.

We have adapted double-diode switching to solve these problems while keeping the fabrication process as simple. The double-diode switch has been studied for the application to flat-panel liquid crystal displays.[6] Using two diodes connected back-to-back, as shown in Fig. 2 (c), better switching functions can be performed because the switching transients from the two diodes are canceled if the characteristics of the two diodes are identical and the two gate pulses are opposite. In addition, the dc bias level of the pixel photodiode can be set arbitrarily by changing the ground level of both gate pulses. The main drawback is that it requires twice the number of gate lines compared to single-diode switching readout.

EXPERIMENTAL

We made sample cells of single and double-diode switching readout as well as a prototype array of pixel detectors with double-diode switch. Standard PECVD was used to deposit p-i-n layers of a-Si:H on glass substrates coated with a thin Chromium layer. Top contacts were also made of a sputtered Cr layer. The contacting p- and n- layers were ~100 nm thick and were heavily doped to enhance the forward conductance of the switching diodes. The thickness of the i-layers is ~1 μm. The switching diode and the photodiode use the same p-i-n layer but have different sizes. The dimensions of the switching diode and the photodiode were 0.3 mm x 0.3 mm and 1 mm x 1 mm respectively.
The capacitances were 10 pF and 120 pF respectively. The schematic diagram of a cell of double-diode switch with a photodiode is shown in Fig. 3. Fig. 4 is the photograph of a 10 x 10 prototype array of photodiodes with double-diode switches.

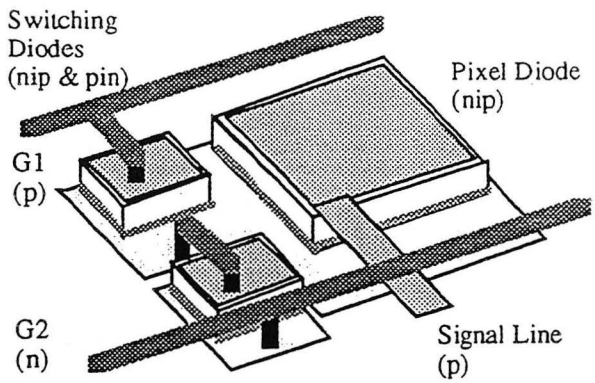

Fig. 3. Schematic diagram of a pixel using double-diode readout scheme.

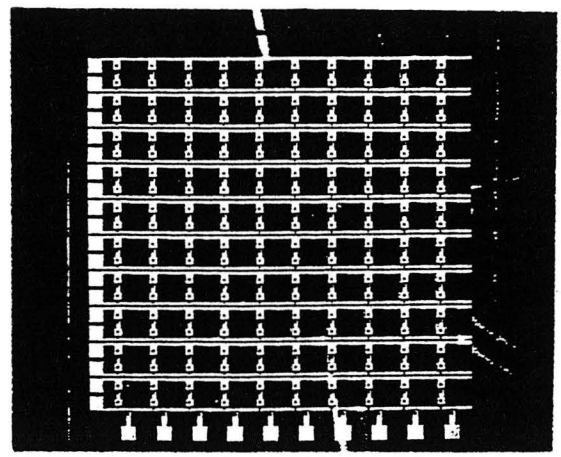

Fig. 4. Photograph of a 10 x 10 prototype pixel detector array using double-diode readout scheme.

First we measured the forward and reverse current characteristics of the diodes. Then we simulated charge detection using LED light of 880 nm wave-length as a radiation source in the measurement set-up shown in Fig. 5. A short pulse of light was shone on the pixel diode. After a time delay, T_d, positive and negative gate pulses were applied to the two switching diodes respectively. The discharging current of the accumulated charges in the photodiode was observed during a finite switching time, T_s, by an oscilloscope with a variable load resistance. The switching time was long enough to transfer the whole charge in the photodiode to the external load resistance, typically ~1 msec.

The integration of the current during this time is the remaining portion of the generated signal charge after the delay time T_d. The storage time was measured by increasing the delay time until the signal charge (integration of the discharging current) drops to 1/e of the generated charges. The readout time was simply determined from the discharging current shape through the switching diodes.

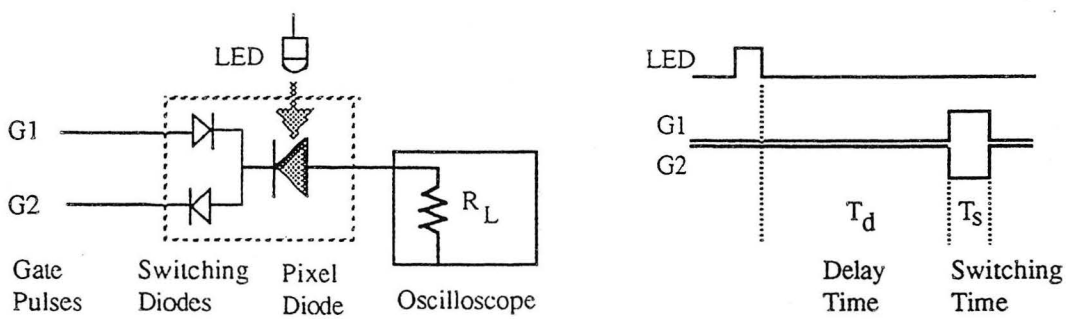

Fig. 5. Measurement setup for the signal charge storage time and the readout time from a pixel diode using double-diode switching readout. Td is the delay time of readout gate pulse after an LED light pulse was shone. The switching time, Ts is long enough to discharge the signal completely ~ 1 msec.

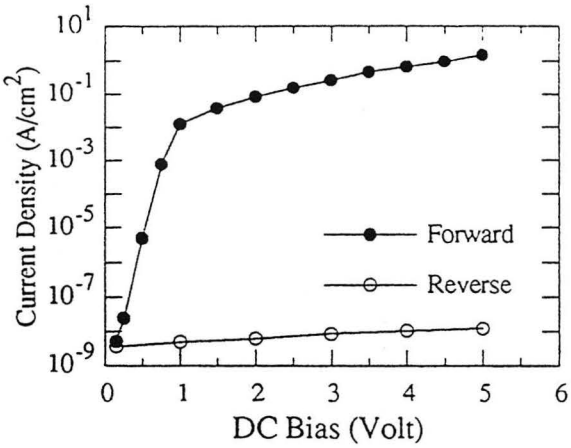

Fig. 6. Measurement of the dc forward and reverse current density of a-Si:H p-i-n switching diodes.

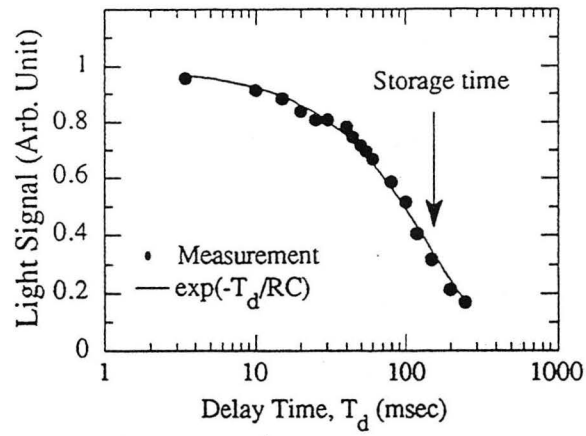

Fig. 7. Measurement of light signal as a function of the delay time of the gate pulse after an incident LED pulse.

RESULTS AND DISCUSSION

Fig. 6 shows the typical forward and reverse current density of sample diodes for both switching and photodiodes. The current on-off ratio (forward-to-reverse) at a bias voltage of 2 V was $>10^6$.

Fig. 7 shows the measured light signal with a load resistance of 1 MΩ with a double-diode switch. The storage time is equivalent to an RC time constant of the detector diode. Since the measured time constant was ~ 140 msec and the detector capacitance is ~ 120 pF, the detector leakage resistance is ~ 1.2 GΩ.

Fig. 8 shows the measured transient and signal discharge currents of a photodiode during the switching time for (a) a single-diode and (b) a double-diode readout scheme. As shown in the figure, the magnitude of the transients in the single-diode readout scheme was canceled up to 90 ~ 95 % in the double-diode readout scheme. The measured readout

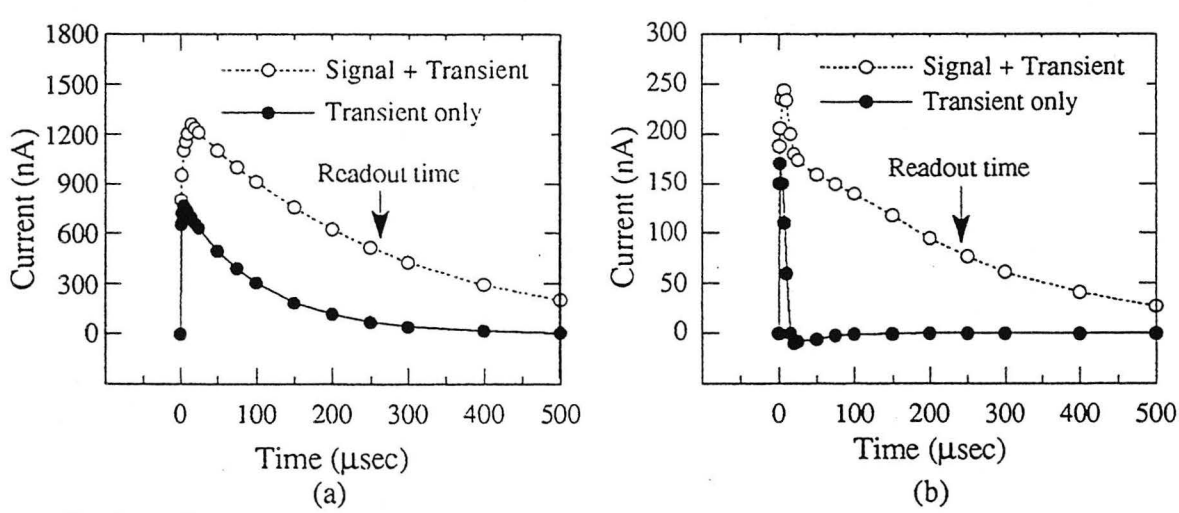

Fig. 8. Transient current (black dot) and the signal discharging current at the load resistance in (a) single-diode readout and (b) double-diode readout scheme. The transient in a single-diode scheme was almost removed in a double-diode scheme.

time was ~ 260 μsec and doesn't show much difference between the single-diode and the double-diode readout schemes. This was due to the effect of the large load resistance.

Fig. 9 shows the effect of the load resistance on the readout time constant. With small load resistance, the readout time approaches to a minimum value of ~ 0.8 μsec. Since the detector capacitance is ~ 120 pF, the on-resistance of the switching diode ~ 6.7 kΩ.

Finally Fig. 10 shows the effect of the gate pulse height on the readout time. The readout time decreases with the increasing gate pulse height because the operation voltage of the switching diode increases. However this effect also saturates and it also can be explained by the effect of the large load resistance.

The two equivalent RC time constants, the storage time and the readout time are simply

$$\text{Storage time} = C_d \frac{R_d R_{off}}{R_d + R_{off}} \approx C_d R_d \propto \frac{1}{J_r} \tag{1}$$

$$\text{Readout time} = C_d \frac{R_d R_{on}}{R_d + R_{on}} \approx C_d R_{on} \propto \frac{A_d}{A_s J_f} \tag{2}$$

where C_d and R_d are the detector capacitance and effective internal resistance. R_{on} and R_{off} are on- and off- resistance of the two switching diodes and A_d and A_s are the area of the detector and switching diodes. Finally J_f and J_r are the forward and reverse current densities at the operating biases. From the above equation (1) and (2), the ratio of storage-to-readout time is approximately

$$\frac{\text{Storage time}}{\text{Readout time}} \propto \frac{A_s J_f}{A_d J_r} \tag{3}$$

From the measured ratio of the time constants (140 msec and 0.8 μsec) and the size of diodes (A_d 1 mm^2 and A_s 0.09 mm^2), the estimated current on-off ratio was ~2 x 10^6 which agrees well with the value obtained from the curves in Fig. 6.

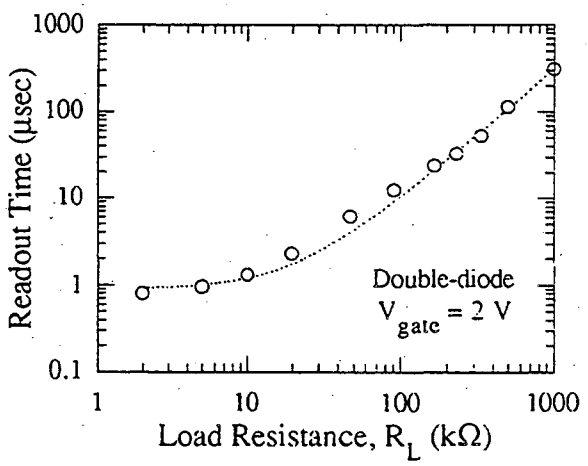

Fig. 9. Measurement of the readout time of the double-diode switching as a function of the load resistance.

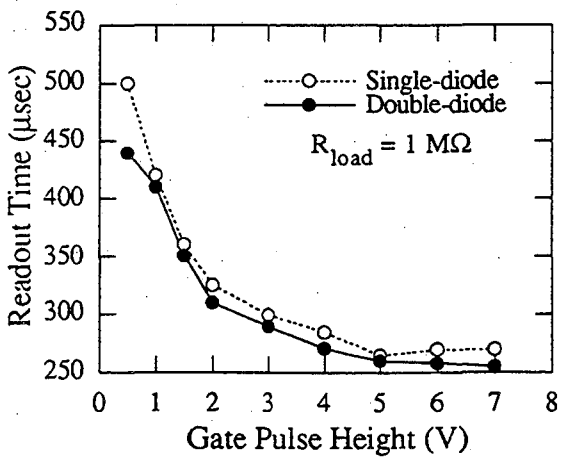

Fig. 10. Readout time of the single-diode and double-diode switching as a function of the gate pulse height.

The scanning cycle or the frame rate is determined by the product of the number of rows and the readout time of a pixel. The maximum number of rows can also be estimated by the ratio of the storage time to the readout time. Therefore in order to increase this ratio, a-Si:H pin diodes must have a high on-off current ratio. Currently we are studying methods to improve the ratio of the forward-to-reverse current by optimizing material and device parameters, such as, the i-layer thickness and the dangling bond density, the p- and n- layer thickness, doping density etc.

CONCLUSION

We have demonstrated the feasibility of making double-diode switching readouts using the same a-Si:H p-i-n layer used as the photodiode. The simple analysis shows that the forward-to-reverse current ratio is linearly related to the ratio of the storage-to-readout time. Therefore improvement of the diode action is very important in order to improve the scanning speed in a large pixel array.

ACKNOWLEDGMENTS

This work was supported by the U.S. Department of Energy under Contract No. DE-AC03-76SF00098.

REFERENCES

[1] V. Perez-Mendez, J. Morel, S.N. Kaplan and R.A. Street, "Detection of charged particles in amorphous silicon layers," Nucl. Instr. and Meth., A**252**, pp. 478-482 (1987).

[2] B. Equer and A. Karar, "Amorphous semiconductors for particle detection: Physical and technical limits and possibilities," Nucl. Instr. and Meth., A**275**, pp. 558-563 (1989).

[3] V. Perez-Mendez, S.N. Kaplan, G. Cho, I. Fujieda, S. Qureshi, W. Ward and R.A. Street, "Hydrogenated Amorphous Silicon Pixel Detectors for Minimum Ionizing Particles, "Nucl. Instr. and Meth., A**273**, pp. 127-134 (1988).

[4] R. A. Street, S. Nelson, L. Antonuk and V. Perez-Mendez, in Amorphous Silicon Technology - 1990, edited by P.C. Taylor, M.J. Thompson, P.G. LeComber, Y. Hamakawa and A. Madan (Mat. Res. Soc. Symp. Proc. **192**, San Francisco, CA. 1990), pp. 441-452.

[5] K. Yamamoto, K. Sai, Y. Ohta, H. Mimura and K. Kitamura, "Amorphous Silicon 2-Dimensional Image Sensors," Technical Digest of the 8th Sensor Symp., 1989, pp. 55-58.

[6] W.D. Boer, Y. Baron and Z. Yaniv, "Two-terminal Switches for Active-matrix LCDs," Information Display 10/1990, pp. 4-6.

LAWRENCE BERKELEY LABORATORY
UNIVERSITY OF CALIFORNIA
TECHNICAL INFORMATION DEPARTMENT
BERKELEY, CALIFORNIA 94720

ABG978
LBL Libraries