Submitted to Physics Letters B

RECEIVED
LAWRENCE
RADIATION LABORATORY

LBL-339
Preprint c.2

DOCUMENTS SECTION

DUALITY CONSTRAINTS IN INCLUSIVE REACTIONS

M. B. Einhorn, M. B. Green, and M. A. Virasoro

September 10, 1971

LAWRENCE BERKELEY LABORATORY
UNIVERSITY OF CALIFORNIA
BERKELEY

TWO-WEEK LOAN COPY

This is a Library Circulating Copy
which may be borrowed for two weeks.
For a personal retention copy, call
Tech. Info. Division, Ext. 5545

34a

DISCLAIMER

This document was prepared as an account of work sponsored by the United States Government. While this document is believed to contain correct information, neither the United States Government nor any agency thereof, nor the Regents of the University of California, nor any of their employees, makes any warranty, express or implied, or assumes any legal responsibility for the accuracy, completeness, or usefulness of any information, apparatus, product, or process disclosed, or represents that its use would not infringe privately owned rights. Reference herein to any specific commercial product, process, or service by its trade name, trademark, manufacturer, or otherwise, does not necessarily constitute or imply its endorsement, recommendation, or favoring by the United States Government or any agency thereof, or the Regents of the University of California. The views and opinions of authors expressed herein do not necessarily state or reflect those of the United States Government or any agency thereof or the Regents of the University of California.

DUALITY CONSTRAINTS IN INCLUSIVE REACTIONS*

M. B. Einhorn

Lawrence Berkeley Laboratory
University of California
Berkeley, California 94720

M. B. Green†

Institute for Advanced Study
Princeton, New Jersey 08540

and

M. A. Virasoro‡

Department of Physics
University of California
Berkeley, California 94720

ABSTRACT

The constraints imposed by the Harari-Freund conjecture on a dual model are shown to lead to the vanishing of the pomeron-pomeron-reggeon coupling and a unique criterion for the absence of nonscaling (secondary) terms in inclusive reactions.

* Work supported in part by the U.S. Atomic Energy Commission.

† Participating guest, Lawrence Berkeley Laboratory. Research sponsored by N.S.F. Grant GP-16147.

‡ Participating guest, Lawrence Berkeley Laboratory. Research supported in part by the Air Force Office of Scientific Research, Office of Aerospace Research, USAF, under Contract number F44620-70-C-0028. Address after October 1, 1971: University of Buenos Aires, Dept. de Fisica, Peru 272, Buenos Aires, Argentina.

The purpose of this paper is to present a general framework for a dual model for multiparticle processes which embodies the Harari-Freund conjecture. Although our discussion is only qualitative, we are led to two interesting results: (1) In such a scheme, the pomeron-pomeron-reggeon coupling vanishes, which explains several remarkable experimental features of exclusive and inclusive reactions and suggests a new duality property for pomeron-induced processes. (2) We are led to a unique criterion for the elimination of nonscaling (secondary) contributions to inclusive reactions $(a + b \to c_1 + c_2 + \cdots + X)$. In this note, we limit ourselves to a survey of the model and present more detailed arguments elsewhere [1].

We begin with the four-point function for an elastic scattering amplitude; in figs. 1a and 1b we represent by duality diagrams [2] the two components of the amplitude which contribute to the total cross section $a + b \to X$. Such diagrams contain information of two types:

(a) Quantum numbers: These are carried by the quark lines.

(b) Topology: The shape of a diagram indicates which channels have discontinuities. [For example, the amplitude corresponding to fig. 1a is assumed not to have a discontinuity in the $(a\bar{b})$ channel.] Figure 1a has resonances in the s (ab)-channel and reggeons* in the t $(b\bar{b})$-channel. Figure 1b has nonresonant background in (ab) and the pomeron [3] in $(b\bar{b})$. The topology would suggest that there are Regge poles in the $(b\bar{b})$ channel, but at this point we impose the Harari-Freund (HF) hypothesis [4] which implies that the contribution of these reggeons to the imaginary part of the amplitude corresponding

* In this paper, the term reggeon or Regge pole should be understood to exclude the pomeron.

to fig. 1b must be negligibly small since they would be dual to exotics.* But since the diagram is symmetric under $b \leftrightarrow \bar{b}$, these reggeons cannot contribute to the real part either. For simplicity we shall assume their contribution is strictly zero.† This property is easily generalized to an arbitrary diagram: Only the pomeron but no secondary poles contribute to a channel from which no quarks are exchanged with any other channel. It is this feature alone that will be shown to lead to the vanishing of the pomeron-pomeron-reggeon coupling.

Consistency with unitarity requires considering diagrams like the ones shown in figs. 1c and 1d. So far, the classification of dual diagrams is the same as in the perturbation series approach [6].‡ However, in our attempt to generalize the HF ansatz for the n-point function, we are led to suppose that, when the full series is summed and renormalized, certain contributions must be suppressed. Somewhat surprisingly, as we shall show in the discussion which follows, these

---

* Although singularities in the pomeron diagram at reggeon poles must be eliminated or suppressed, the coupling of the pomeron might still reflect the couplings of the f and f', at least, as to their internal symmetry properties. Cf. Ref. [5].

† We analyze diagrams only as to whether their asymptotic behavior is of the order of the pomeron, reggeons, or reggeon-pomeron cuts. Contributions on the order of reggeon-reggeon cuts will be neglected.

‡ For our purposes, diagrams which only differ in the number of quark holes with no external mesons attached to them are identical.

constraints can be characterized at the four-point level in a way which can be easily generalized to the n-point function. (Indeed, the HF conjecture plays the role of a conservation law which preserves the exchange degeneracy of the renormalized Regge trajectories as well as of their couplings.)

Continuing our analysis, then, the absence of poles in $(b\bar{b})$ in fig. 1b implies that the amplitude corresponding to fig. 1c vanishes, as do all other diagrams with only one external particle on a quark loop. The diagram of fig. 1d corresponds to the addition of a handle to the basic duality diagram. It has the same quark content as fig. 1a but a different topology. Thus fig. 1d has a discontinuity in the (ab) channel even though a and b are not adjacent on a quark loop. Quarks are exchanged between $(b\bar{b})$ and $(a\bar{a})$, so we expect to have Regge poles in the $(b\bar{b})$ channel. The condition that (ab) be exotic does not eliminate this contribution, so we are faced with an apparent violation of the HF hypothesis. It would be impossible to neglect the diagram entirely (as we have done with fig. 1c) and maintain at the same time a physically reasonable theory, since it corresponds to the absorption of resonances in the $(a\bar{b})$ channel and may well have a significant discontinuity in $(a\bar{b})$. For consistency with the HF hypothesis, then, we must require that the Regge poles in $(b\bar{b})$ do not contribute to the imaginary part in the (ab) channel. Fortunately this requirement is compatible with having <u>strong</u> absorption because, to the extent that the pomeron is purely imaginary, the contribution of the reggeon-pomeron cut to the discontinuity in (ab) is suppressed [7]. Thus, fig. 1d is important for the <u>real</u> part of the amplitude in the (ab) channel, but makes a small contribution to the imaginary part. In this way, for the <u>imaginary</u> part of the amplitude,

reggeons in $(b\bar{b})$ plus their absorptive corrections will be dual to resonances in (ab) plus their absorption (leaving only peripheral resonances prominent)[8]. We shall assume that, similarly, diagrams with more handles can be treated consistently.* Therefore, from now on, we will include all possible handles (as well as holes) in the diagrams of figs. 1a and 1b.

Having thus arranged compatibility with the HF hypothesis, we find the generalization to multiparticle reactions and, in particular, to inclusive cross sections is straightforward. As a generalization of the two-component theory, we assume that an amplitude is the sum of amplitudes, each of which corresponds to diagrams with distinct quark content or topology. Consider $a + b \to c + X$ in the region of the fragmentation of a into c. The relevant Regge poles are the ones in the $(b\bar{b})$ channel [10], and we are interested in those reggeons which contribute to the discontinuity of the three-body forward elastic amplitude in the $(ab\bar{c})$ channel. The diagrams contributing to this process are depicted in fig. 2.† We again forbid reggeons in a channel unless quarks are exchanged with another channel. Thus figs. 2a and 2b indicate all pomeron contributions to the $(b\bar{b})$ channel,‡ whereas figs. 2c and 2d have reggeons in the $(b\bar{b})$ channel. If we neglect momentarily the inclusion of handles, then the contribution of each kind of diagram is

* One way to understand these approximations is to suppose that the only important contributions of diagrams with handles correspond to those described by the dual reggeon calculus of Lovelace [9].

† For simplicity, in this paper we will assume that particles a and c do not have purely vacuum quantum numbers (other than spin and parity). For the moment, we neglect processes involving diffraction dissociation.

‡ Figure 2b is also purely pomeron in the $(a\bar{a})$ channel and leads to the limiting distribution in the pionization region.

positive definite. To the extent that handles primarily contribute absorptive corrections, one can argue that the absorption of resonances contributing to total cross sections will not alter the net positivity of the resonant component. It is not clear to us whether this property generalizes to inclusive cross sections, and we are not sure whether inclusive cross sections must necessarily fall to their asymptotic values. We hope to return to this question at a later time.

Each of the diagrams of fig. 2c and 2d contribute to reggeons in the $(b\bar{b})$ channel; a priori we do not know the relative strengths of each. However, we can make a few general observations. Figure 2c corresponds to normal regge exchange in the $(a\bar{c})$ channel; fig. 2d does not. Consequently for small values of the momentum transfer $(a\bar{c})$, we might expect fig. 2c to dominate fig. 2d. Small $(a\bar{c})$ occurs for small transverse momentum of c and near the boundary of the fragmentation region (x near to one). As we move toward the pionization region and the momentum transfer $(a\bar{c})$ becomes large, we expect fig. 2d to become relatively more important.

Now one can ask under what conditions on the quantum numbers of the particles will there be no reggeons in the $(b\bar{b})$ channel. It is easy to see that the only criterion eliminating all the diagrams in fig. 2c and 2d is that both (ab) and $(b\bar{c})$ must be exotic. In this case, the inclusive cross section for the fragmentation of a into c will be energy independent already at low energies.

Several aspects of this criterion should be noted:

1. Although we have obtained the result when all particles are mesons it is readily generalized to the case when one of the particles is a baryon. The topology of the surfaces is more complicated since we are now dealing with the nonplanar duality diagrams of

Mandelstam [11], but the same criterion obtains. Also, if at most one of the three particles is a baryon, and if (ab) and $(b\bar{c})$ are exotic, then $(ab\bar{c})$ is also exotic. When more than one baryon is involved, one must be very careful since he may encounter the analogue of the baryon-antibaryon paradox [12] for total cross sections, in which the duality diagrams might lead one to believe there are no secondaries contributing to the baryon-antibaryon total cross section.

2. In cases when $(a\bar{c})$ is not exotic, to the extent that the fragmentation is dynamically dominated by reggeons in the $(a\bar{c})$ channel, the elimination of fig. 2c alone will imply approximate energy independence. For this it is sufficient to have $(ab\bar{c})$ exotic, and we certainly expect this to be the case when the longitudinal rapidity of c is near the boundary of the fragmentation phase space. On the other hand, when $(a\bar{c})$ is exotic, fig. 2c is absent and the quantum numbers of $(ab\bar{c})$ are irrelevant. In this case, only the criterion given above will eliminate reggeons in the $(b\bar{b})$ channel.

3. Two other suggestions for a criterion for the absence of secondaries have been published previously:

(a) $(ab\bar{c})$ must be exotic [13].

(b) Both (ab) and $(ab\bar{c})$ must be exotic [14]-[15].

With regard to the suggestion (b), we see no reason to prefer one of the two diagrams in fig. 2d and, hence, no motivation for this suggestion. As for suggestion (a), we have discussed in the preceding remark the possible relevance of the $(ab\bar{c})$ channel. Clearly a sensitive discrimination between the suggestion (a) and our criterion can be found in the behavior of the inclusive cross section far from the phase space boundary (i.e., for small x) or in reactions in which $(a\bar{c})$ is exotic.

4. Simple experimental tests will distinguish our criterion from the previous proposals made in refs. [13] - [15]. Some examples are as follows:

(a) The reaction $K^+p \to \pi^-X$ provides a sensitive test. We predict scaling at low energies in the proton fragmentation region but not in the kaon fragmentation region. Both previous criteria would predict no secondaries in both fragmentation regions.

(b) For $K^+p \to \pi^+X$, $pp \to \pi^\pm X$, $pp \to K^+X$, we predict that there will be secondary contributions to the scaling limit, whereas both criteria (a) and (b) predict no secondaries. We emphasize that the energy dependence of these reactions in which $(a\bar{c})$ is not exotic will provide a measure of the relative strength of fig. 2c versus fig. 2d. (Our conjecture is that the energy dependence will be most easily seen at small x.)

(c) For $K^+p \to K^-X$, $pp \to K^-X$, $pp \to \bar{p}X$, we predict energy independence at low energies.

Although lack of space does not permit a review of available data, the ideas expressed here are consistent with all experiments of which we are aware.*

5. The criterion we propose leads to interesting predictions in the pionization region concerning the presence or absence of secondaries there. This is discussed in ref. [1]; we remark in passing

---

* For example, in the fragmentation of the proton, the (normalized) inclusive cross sections at intermediate energies for $\gamma p \to \pi^-X$ exceeds $pp \to \pi^-X$ which, in turn, exceeds $K^+p \to \pi^-X$. C. Risk (private communication).

that using our criterion one does not predict the absence of pomeron-meson interference terms in all reactions, as was shown to follow from the other two proposals [15].

6. The criterion is easily generalized to inclusive reactions involving a larger number of detected particles. The general criterion for the reaction $a + b \to c_1 + c_2 + \cdots + c_n + X$ in each of its many limits is that there are no secondary Regge poles contributing if and only if each channel whose subenergy becomes large is exotic.

We now turn to the consideration of diffraction dissociation, which can occur when $a\bar{c}$ has the quantum numbers of the vacuum. Because of this, we have two new types of contributions to the fragmentation of a into c (in addition to fig. 2) which are illustrated in fig. 3. We immediately observe that in no diagram is there a pomeron-pomeron-reggeon (PPR) coupling or, equivalently, no pomeron-pomeron-resonance vertex. This follows from our interpretation of the HF hypothesis, viz., that only the pomeron can be exchanged between independent quark loops. This conclusion is drastically different from Brower and Waltz [17] and from Frampton [18] who did not impose the HF condition. This simple result has many interesting features:

1. The vanishing of the PPR coupling can be easily understood in any simple quark model in which the pomeron corresponds to the exchange of no quarks.

2. The result is very close to the intuitive "optical" picture of diffraction scattering in which the "pomeron" corresponds to a shadow effect. This would also require that the triple pomeron vertex is also very small. In such a picture, diagrams involving multiple pomeron exchange between two particles simply have no meaning.

On the other hand, two pomerons can be exchanged in the scattering of three particles, as for example in the pionization region.

3. In their analysis of the reaction $\pi^- p \to \pi^- p + (\pi^+\pi^-)$, Lipes et al. [19] emphasized that, although the multi-Regge model worked well, double pomeron exchange is very much suppressed. In particular, "f production is suppressed by a factor of at least 25 over what one might expect from double-pomeranchukon exchange." We regard this as striking experimental evidence for the vanishing of the PPR coupling.

4. Our interpretation of the HF hypothesis leads to a new form of duality for amplitudes with "external" pomerons. It follows from fig. 3a that direct channel resonances contributing to the pomeron-particle scattering amplitude do not build secondary Regge poles in the crossed channel. Whether the resonances primarily build the pomeron (as one might conclude from fig. 3a) or lower lying singularities in the crossed channel cannot be answered without a better understanding of the singularity structure of the pomeron-particle amplitude. Experimentally, the question centers on the behavior of the pomeron-particle total cross section as a function of the missing mass squared M^2. Do the resonances oscillate about a constant average values as M^2 increases or do they fall very rapidly with increasing M^2? (This requires more good missing mass spectra for large values of s/M^2.)

5. In any case, the vanishing of the PPR vertex suggests a reinterpretation of all previous fits to the "triple-reggeon limit" for diffraction dissociation [20]. The data on $pp \to pX$ and $\pi^- p \to \pi^- X$ do not fit a simple triple-pomeron formula and must be fitted with a sum of terms. However, it is very striking that only if both the PPP vertex is small near $t = 0$ and the PPR vertex is small compared to

RRP couplings is it possible to understand the M^2 dependence of $d\sigma/dt\, dM^2$, at least for $M^2 \geq 4$ [21]. The most striking feature is its increase with increasing M^2 --only the RRP term has this property for t near zero.

Even without explicit formulas, one might hope to generalize these considerations so that (a) baryon-antibaryon channels could be included, (b) qualitative conclusions about helicity dependence might be drawn, (c) an absorption model for multiparticle amplitudes could be developed. In addition, assuming that every scattering amplitude is the sum of components corresponding to distinct diagrams may provide a useful framework for the phenomenology of multiparticle processes and may facilitate the construction of models.

We are grateful to C. Risk for insights into data on inclusive production and to R. Cahn for helpful discussions and criticism of these theoretical ideas. Two of us (M.B.G. and M.A.V.) would like to thank Professors G. F. Chew and J. D. Jackson for extending the hospitality of LBL to them for the summer.

References.

1. M. B. Einhorn, M. B. Green, and M. A. Virasoro, in preparation.
2. H. Harari, Phys. Rev. Letters 22 (1969) 562. J. L. Rosner, Phys. Rev. Letters 22 (1969) 689.
3. P. G. O. Freund and R. J. Rivers, Phys. Letters 29B (1969) 510. P. G.O. Freund, Nuovo Cimento Letters 4 (1970) 147.
4. H. Harari, Phys. Rev. Letters 20 (1968) 1395. P. G. O. Freund, Phys. Rev. Letters 20 (1968) 235.
5. R. Carlitz, M. B. Green, and A. Zee, Phys. Rev. Letters 26 (1971) 1515 and Phys. Rev. (to be published). P. G. O. Freund, H. F. Jones, and R. J. Rivers, Phys. Letters 36B (1971) 89.
6. K. Kikkawa, B. Sakita, and M. A. Virasoro, Phys. Rev. 184 (1969) 1701. K. Kikkawa, S. A. Klein, B. Sakita, and M. A. Virasoro, Phys. Rev. D1 (1970) 3258.
7. V. Barger and R. J. N. Phillips, Phys. Letters 29B (1969) 676.
8. H. Harari, Phys. Rev. Letters 26 (1971) 1400. Idem, invited talk presented at International Conference on Duality and Symmetry in Hadron Physics, April, 1971, Tel-Aviv (SLAC-PUB-914). M. Davier and H. Harari, Phys. Letters 35B (1971) 239.
9. C. Lovelace, Phys. Letters 34B (1971) 500. Idem, invited paper presented at Conference on Phenomenology in Particle Physics 1971 (C. B. Chiu, G. C. Fox, A. J. G. Hey, eds.), California Institute of Technology, Pasadena, 1971.
10. A. H. Mueller, Phys. Rev. D2 (1970) 2963.
11. S. Mandelstam, Phys. Rev. D1 (1970) 1720.
12. J. L. Rosner, Phys. Rev. Letters 21 (1978) 950. J. L. Rosner, C. Rebbi, and R. Slansky, Phys. Rev. 188 (1969) 2367.

13. H. M. Chan, C. S. Hsue, C. Quigg, and J.-M. Wang, Phys. Rev. Letters 26 (1971) 672. H. M. Chan and P. Hoyer, Phys. Letters 36B (1971) 79.

14. G. Veneziano, Nuovo Cimento Letters 1 (1971) 681.

15. J. Ellis, J. Finkelstein, P. H. Frampton, and M. Jacob, Phys. Letters 35B (1971) 227.

16. M.-S. Chen and F. E. Paige, Secondary Trajectories in Inclusive Reactions, Brookhaven National Laboratory Preprint BNL 15906. These authors also suggest the same criterion as ours, although it is unclear how general their analysis was. They seem to have arrived at the criterion without consideration of the HF hypothesis or of a specific model for the pomeron.

17. R. C. Brower and R. E. Waltz, Dual Topology and Inclusive Cross-Sections, CERN Preprint Ref. TH.1335.

18. P. H. Frampton, Relative Importance of Dual Loops, CERN Preprint TH.1380.

19. R. Lipes, G. Zweig, and W. Robertson, Phys. Rev. Letters 22 (1969) 433. R. Lipes, Nucl. Phys. B24 (1970) 16.

20. R. D. Peccei and A. Pignotti, Phys. Rev. Letters 26 (1971) 1076. J.-M. Wang and L.-L. Wang, Phys. Rev. Letters 26 (1971) 1287. P. D. Ting and H. J. Yesian, Phys. Letters 35B (1971) 321. R. M. Edelstein, V. Rittenberg, and H. R. Rubinstein, Phys. Letters 35B (1971) 408.

21. C. Risk, Quantitative Regge Expressions With Scaling for Experimentally Measured Fast $\pi^{\pm}, K^{+}$ Secondaries and Relation to Backward Elastic Data, Lawrence Radiation Laboratory Report UCRL-20841, June 1971, submitted to Phys. Rev.

FIGURE CAPTIONS

Fig. 1. Diagrams having discontinuities in (ab)

(a) reggeons in $(b\bar{b})$ dual to resonances in ab;

(b) pomeron in $(b\bar{b})$ dual to nonresonant background in (ab). No reggeons in $(b\bar{b})$;

(c) an example of a diagram with only one external particle on a quark loop;

(d) reggeon-pomeron cut in $(b\bar{b})$ dual to absorbed resonances in $(a\bar{b})$. Reggeons in $(b\bar{b})$ do not contribute to the discontinuity in (ab).

Fig. 2. Diagrams having discontinuities in $(ab\bar{c})$. Figures (a) and (b) have only the pomeron in $(b\bar{b})$; Figures (c) and (d) have reggeons in $(b\bar{b})$. Figure (a) gives the dominant contributions to the reggeon-reggeon-pomeron term in the triple reggeon limit. Figure (b) gives the dominant contribution to the pionization limit. All the diagrams in fig. (c) have reggeons in $(a\bar{c})$ whereas those in fig. (d) do not.

Fig. 3. Additional diagrams for diffraction dissociation. Figure (a) gives the triple-pomeron contribution. Figure (b) gives pomeron-reggeon-reggeon contributions [with no pomeron in $(b\bar{b})$].

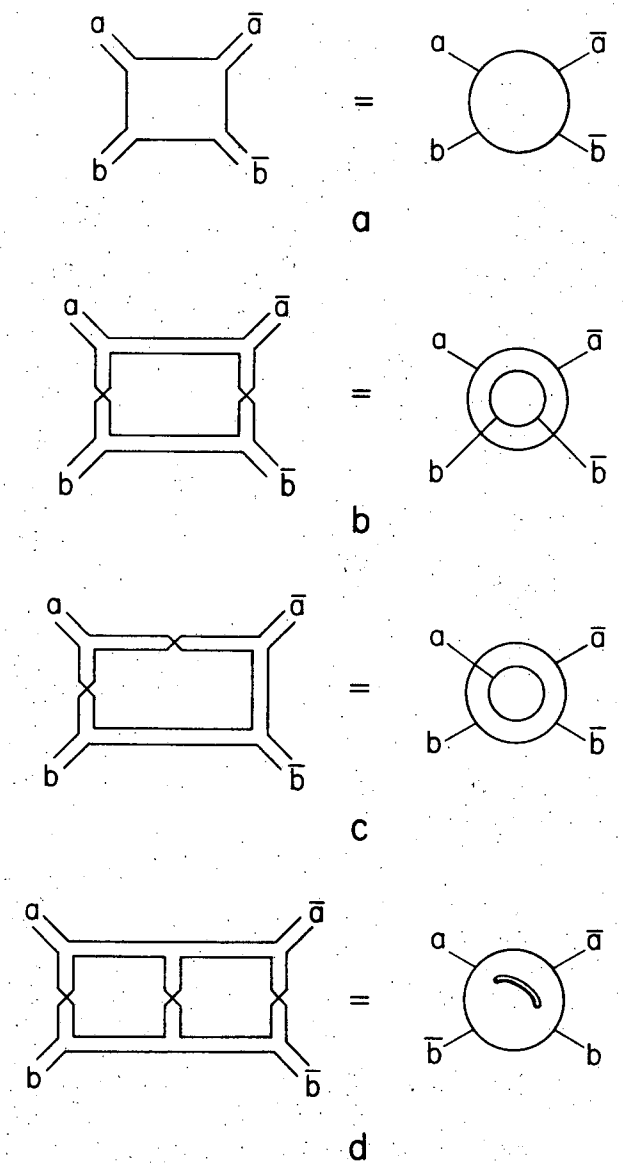

XBL719-4304

Fig. 1

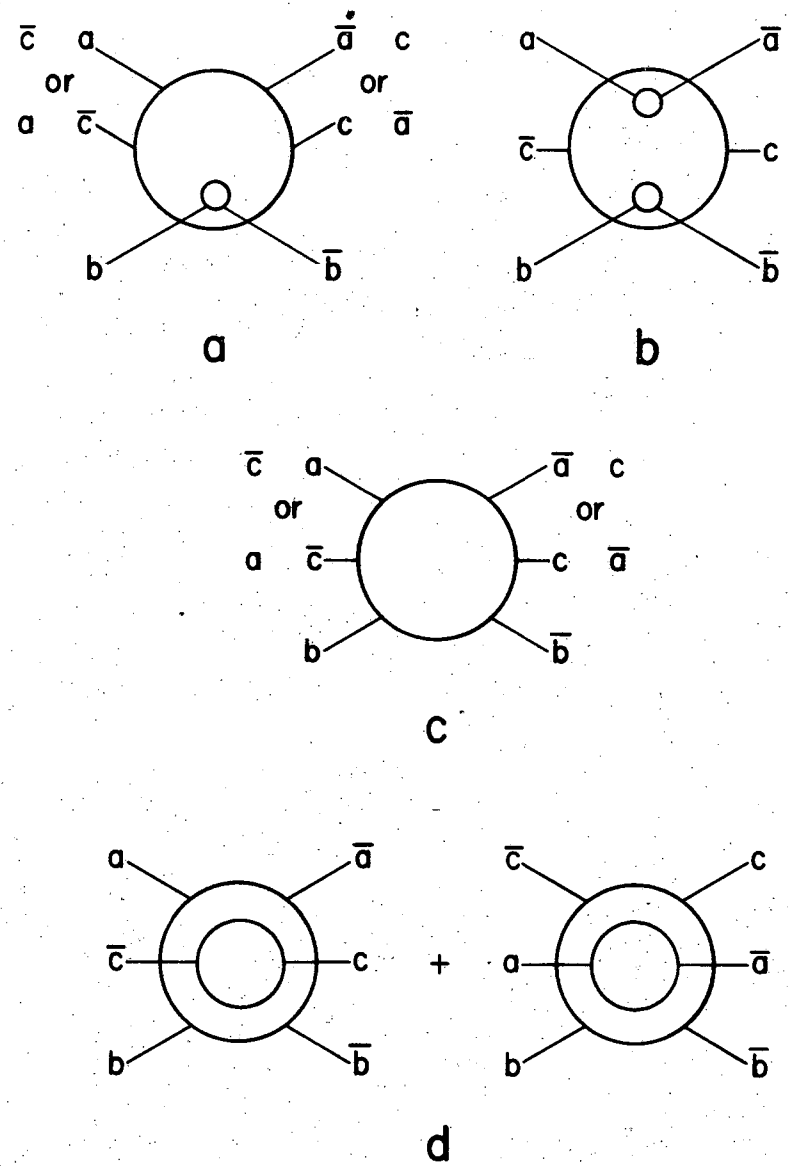

XBL 719-4305

Fig. 2

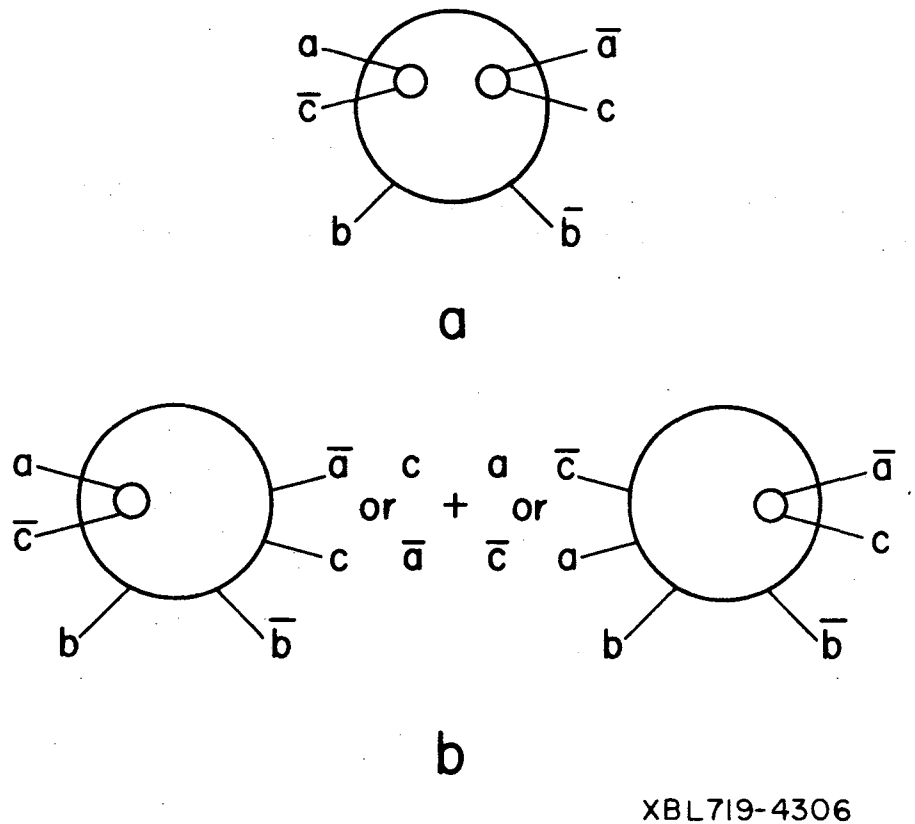

Fig. 3

ADDENDUM

We would like to clarify several possible points of confusion which have come to our attention. With regard to remark 4 on page 10, the pomeron contribution to the pomeron particle amplitude is built partly from direct channel resonances. Figure 3a should not be interpreted as a lowest order diagram in dual perturbation theory. In that language, it contains resonance renormalizations which are dual to the pomeron, as can be seen by adding a hole to the figure. [This is in contrast to particle-particle scattering (Fig. 1a) in which resonance renormalizations do not contribute to the pomeron.]

The second footnote (†) on page 5 should be changed to read as follows: For brevity, in this paper we have not drawn diagrams corresponding to interference terms (three mesons on each quark loop). They can easily be seen not to alter the conclusions [1]. At this point, we need not discuss diagrams corresponding to diffraction dissociation (Fig. 3) since their inclusion also does not change the conclusions about the exoticity criteria.

LEGAL NOTICE

This report was prepared as an account of work sponsored by the United States Government. Neither the United States nor the United States Atomic Energy Commission, nor any of their employees, nor any of their contractors, subcontractors, or their employees, makes any warranty, express or implied, or assumes any legal liability or responsibility for the accuracy, completeness or usefulness of any information, apparatus, product or process disclosed, or represents that its use would not infringe privately owned rights.

TECHNICAL INFORMATION DIVISION
LAWRENCE RADIATION LABORATORY
UNIVERSITY OF CALIFORNIA
BERKELEY, CALIFORNIA 94720