LBL-34037
UC-406

Lawrence Berkeley Laboratory
UNIVERSITY OF CALIFORNIA

Accelerator & Fusion Research Division

Presented at the IEEE Particle Accelerator Conference,
Washington, D.C., May 17–20, 1993, and to
be published in the Proceedings

Design of a High-Power Test Model of the PEP-II RF Cavity

H.D. Schwarz, R.A. Bell, J.A. Hodgson, J.G. Judkins, K. Ko, N. Kroll,
C.K. Ng, R.P. Pendleton, K. Skarpaas, G. Lambertson, R. Rimmer,
M.S. deJong, T. Trans-Ngoc, F.P. Adams, M.G. Lipsett, and W. Mellors

May 1993

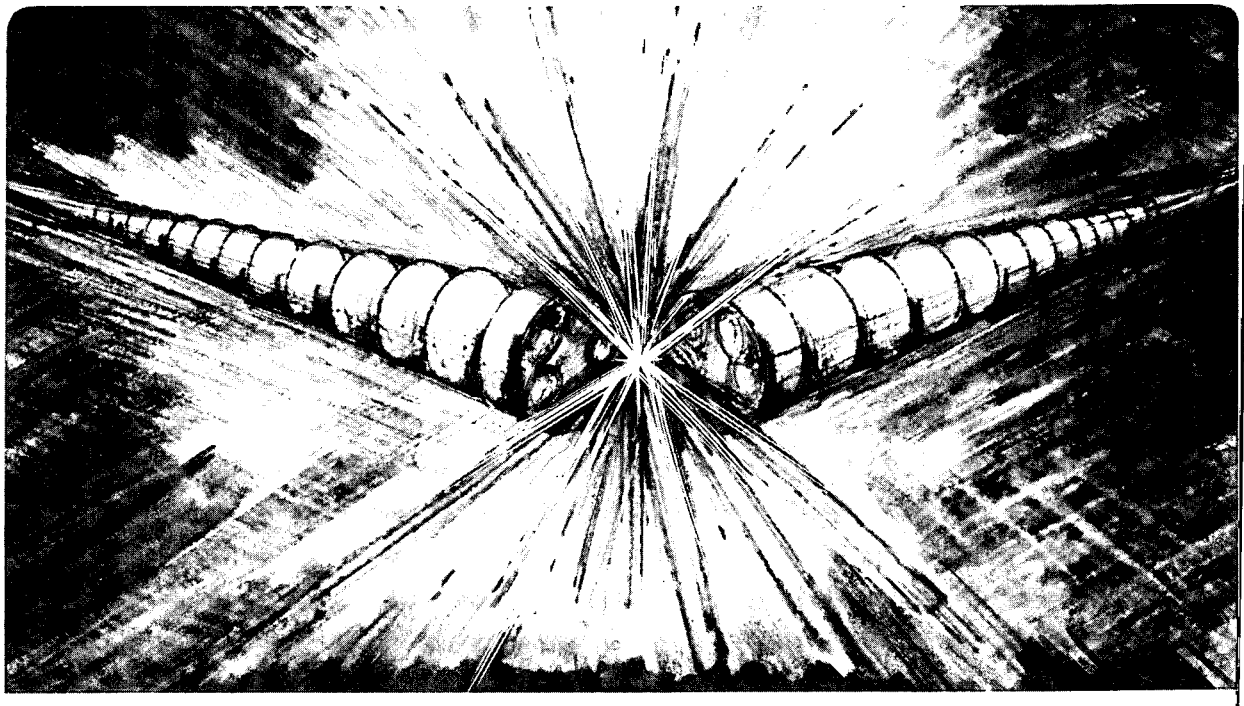

REFERENCE COPY
Does Not
Circulate
Bldg. 50 Library.
LBL-34037
Copy 1

Prepared for the U.S. Department of Energy under Contract Number DE-AC03-76SF00098

DISCLAIMER

This document was prepared as an account of work sponsored by the United States Government. While this document is believed to contain correct information, neither the United States Government nor any agency thereof, nor the Regents of the University of California, nor any of their employees, makes any warranty, express or implied, or assumes any legal responsibility for the accuracy, completeness, or usefulness of any information, apparatus, product, or process disclosed, or represents that its use would not infringe privately owned rights. Reference herein to any specific commercial product, process, or service by its trade name, trademark, manufacturer, or otherwise, does not necessarily constitute or imply its endorsement, recommendation, or favoring by the United States Government or any agency thereof, or the Regents of the University of California. The views and opinions of authors expressed herein do not necessarily state or reflect those of the United States Government or any agency thereof or the Regents of the University of California.

LBL-34037
CBP Note-043
SLAC-PUB-6007

Design of High-Power Test Model of the PEP-II RF Cavity*

H.D. Schwarz, R. A. Bell, J.A. Hodgson, J.G. Judkins, K. Ko, N. Kroll,
C.K. Ng, R.P. Pendleton, K. Skarpaas

Stanford Linear Accelerator Center
Stanford University
Stanford, CA 94309

G. Lambertson, R. Rimmer

Lawrence Berkeley Laboratory
University of California
Berkeley, CA 94720

M.S. deJong, T. Tran-Ngoc, F.P. Adams, M.G. Lipsett, W. Mellors

AECL Research,
Calk River Laboratories
Calk River, Ontario K0J1J0, Canada

* This work was supported by the Director, Office of Energy Research, Office of High Energy and Nuclear Physics, High Energy Physics Division, of the U.S. Department of Energy under Contract No. DE-AC03-76SF00098.

SLAC-PUB-6007
LBL-34037
May 1993
A

Design of a High-Power Test Model of the PEP-II RF Cavity *

H.D. Schwarz, R.A. Bell, J.A. Hodgson, J.G. Judkins, K. Ko, N. Kroll^, C.K. Ng, R.P. Pendleton, K.Skarpaas,
Stanford Linear Accelerator Center, Stanford, Ca 94309, USA

G. Lambertson, R. Rimmer,
Lawrence Berkeley Laboratory, Berkeley, Ca 94720, USA

M.S. deJong, T. Tran-Ngoc, F.P. Adams, M.G. Lipsett, W. Mellors,
AECL Research, Calk River Laboratories. Calk River, Ontario K0J1J0, Canada

Abstract

The design of a normal-conducting high-power test cavity (HPTC) for PEP-II is described. The cavity includes HOM loading waveguides and provisions for testing two alternate input coupling schemes. 3-D electromagnetic field simulations provided input information for the surface power deposition. Finite element codes were utilized for thermal and stress analyses of the cavity to arrive at a suitable mechanical design capable of handling the high power dissipation. The mechanical design approach with emphasis on the cooling channel layout and mechanical stress reduction is described.

I. INTRODUCTION

The PEP-II B-factory design at SLAC will use normal-conducting copper cavities at 476 MHz for acceleration of the beam. In order to minimize the possibility of multi-bunch oscillations the total number of cavities is kept to a minimum and higher order mode (HOM) impedances are reduced by specific loading schemes [1]. The minimized number of cavities requires higher than usual gap voltages of almost 1 MV per cavity and correspondingly higher power dissipation of up to 150 kW in the cavity walls . The Higher Order Mode impedance is reduced by lowering the Q of HOMs by up to three orders of magnitude with the use of special loading waveguides terminated into broad band HOM loads.

The major design choices for the cavity are described based on electromagnetic field simulations and thermal and stress calculations. A conceptual design [2] has been established which could dissipate the required 150 kW without excessive stress.

A preliminary design for broad band HOM loads is presented. There are two choices for coupling networks, coaxial loop and iris coupling. Both are planned to be evaluated with the prototype cavity. The coupling networks need to handle the power dissipated in the cavity plus power delivered to the beam totaling 500 kW. The coupling factor through a coupling iris was calculated using the MAFIA code.

II. CAVITY DESIGN CONCEPT

A reentrant cavity shape with three HOM loading ports and ports for coupling and tuning has been developed and extensively analyzed using the 3D electromagnetic codes MAFIA and ARGUS. To generate the surface heating distribution the magnetic field of the fundamental mode was translated from the finite-difference mesh of the electrical codes onto the 3D finite-element mesh used by the thermal-mechanical codes, and scaled to give a total dissipated power of 150 kW. The power density, F (W/m^2), is derived by directly calculating the tangential magnetic field, H_{tan} at the surface, and converting to surface heating via the relation:

$$F = \frac{1}{2} R_s \mathbf{H}_{\tan}^2$$

$$R_s = \left[\frac{\omega\mu}{2\sigma}\right]^{1/2} = 0.0057\Omega \quad \text{OFE Cu @476 MHz}$$

where R_S is the surface resistance at 27°C. Power flow densities of 33 W/cm^2 at the base of the nose cones and up to 90 W/cm^2 in small areas at the intersection of the HOM loading waveguides with the cavity body were calculated. In order to cool the cavity for this relatively high power flow, a closely spaced cooling channel layout has been selected covering as much of the outside of the cavity as possible. An outline drawing of the cavity with its ports is shown in Figure 1. This preliminary cavity design was then used as the basis for finite element code simulations to evaluate thermal and stress behavior of the cavity under full power.

III. THERMAL AND STRESS CALCULATIONS

First a 2D analysis was made to model the basic layout of the cooling channels. The analysis assumed a water velocity of 5 m/s resulting in a heat transfer coefficient of 21.2 kW/m^2°C. The inlet water temperature was set at 35°C which, with a specified 10°C temperature rise of the water, results in an average water temperature in the cooling channels of 40°C. The resultant average temperature of the inside surface of the cavity was 52°C. This would cause a reduction in Q of 6.3% due to the increase in copper resistivity with temperature. The peak temperature occurred at the flat part of the nose cone and was only 60°C, and the maximum calculated Von Mises stress was 16 MPa, well below the yield point of OFE copper. The frequency shift caused by the deformation of the cavity from the combined affects of water pressure, vacuum and thermal loading, was calculated to be -130 kHz.

Next a 3D model was made. The results for this baseline 3D case were an average temperature of about 60°C, peak temperature of 97°C at the intersection of the HOM waveguide with the cavity and a peak Von Mises stress of 71 MPa in the same region. It is noteworthy that the peak stress occurs in a very localized region and is compressive. A number of variations on the baseline case were analyzed in an effort to better understand how to optimize the cavity design. The variations included adding stiffening supports at various locations along the waveguides and other regions of the cavity, specifying the cooling water routing, etc. In one of these variations the water velocity was reduced to 3.7 m/s

*Work supported by the Department of Energy, contracts DE-AC03-76SF00515 and DE-AC03-76SF00098, Grant DE-FG03-92ER40759, and AECL Research, Canada.

^Also Dept. of Physics, UCSD, La Jolla, Ca 92093

Presented at the Particle Accelerator Conference (PAC '93), Washington,DC, May 17-20, 1993

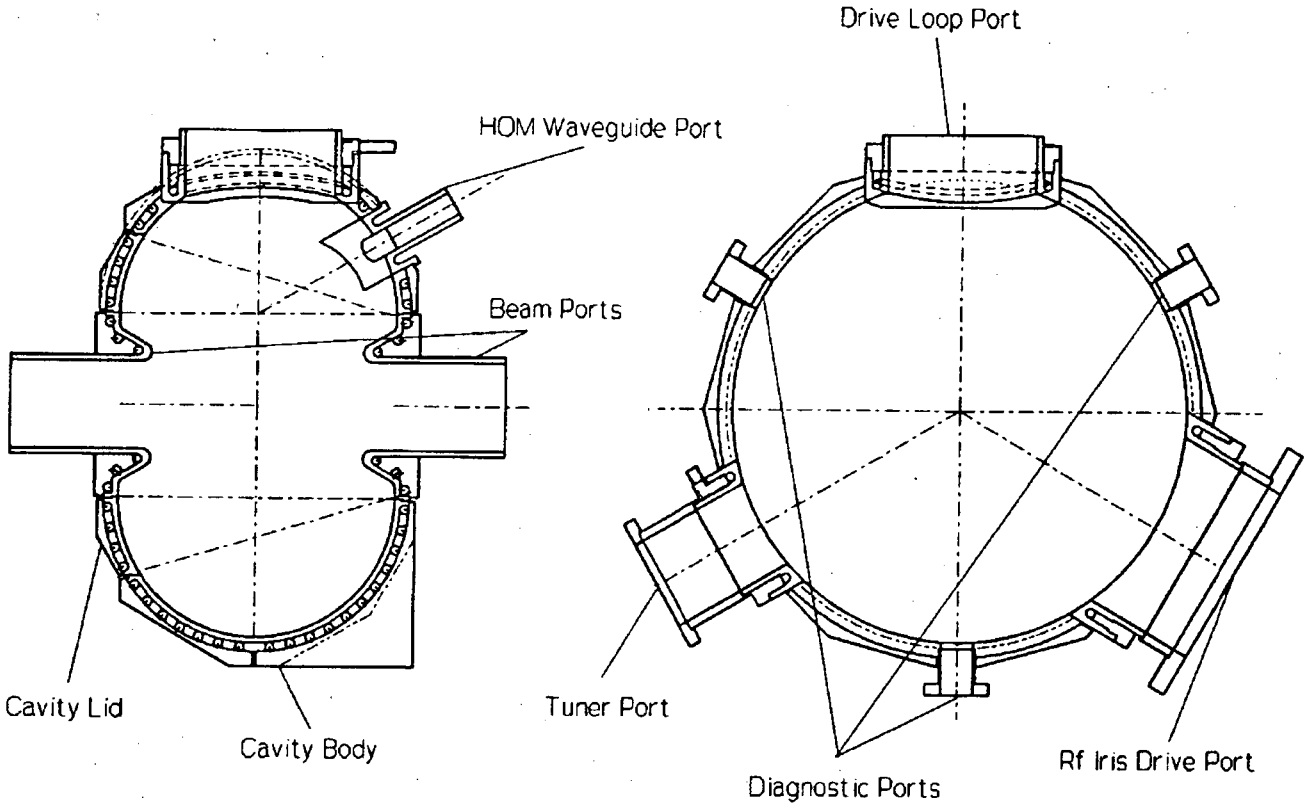

Figure 1. Port Location and Cooling Channel Layout for the PEP-II High Power Test Cavity

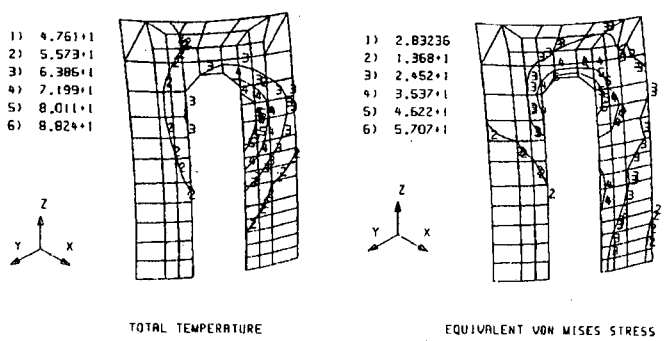

Figure 2. Temperature (°C) and stress (MPa) of HOM waveguide cavity opening.

which led to a peak temperature at the end of the iris of 101°C. Using this *peak* temperature as an overall *average* temperature the reduction in Q would be 14.5%; this is an upper bound on the reduction in Q. Combined with the calculation at an average temperature of 52°C, a reasonable estimate for the reduction in Q due to the increase in copper resistivity is 10%. An analysis incorporating all of the beneficial changes resulted in a reduction of the peak stress to 57 MPa, Figure 2. The knowledge gained from these variations is being incorporated into the detailed design of the high power test cavity.

The maximum stress in the HOM waveguide intersection with the cavity is predicted to be close to the yield point of fully annealed OFE copper of 70 MPa. If the stress in the HPTC were to exceed the yield point in this isolated region, the region would undergo a small inelastic deformation in the initial conditioning period, and from then on would deform elastically. Because the region is small this should not be a problem for either the RF or the mechanical characteristics of the cavity.

IV. MECHANICAL DESIGN

The cavity will be assembled as two bowls, one constituting about 80% of the cavity body, the other 20%. The cooling channels will be cut into the outside of the copper bowls and then covered either by brazed lids or electroformed copper. Port holes will then be machined into the cavity body. All ports and two reentrant nose pieces will be fabricated separately, with integrated cooling channels, and then brazed into the cavity bowls. This step will be followed by a final machining of the cavity interior together with a frequency tuning by trimming the length of the nose cones. A last brazing cycle will join the cavity bowls together. The exact fabrication procedure is being finalized with the objective of simplifying the assembly. Once the design is finished another thermal-mechanical analysis will be performed using the exact cooling channel layout to confirm that the design meets the specifications.

V. HOM LOADS

The RF cavities for the PEP-II B-factory are designed with waveguides as high pass filters to couple out the HOM power while perturbing the fundamental mode relatively lightly. In practice this requires a wide band low reflection load at the end of the waveguides. A load that has high reflections may decrease the effectiveness of the HOM

damping scheme and may result in higher Qs for the cavity HOMs. The design requires that the load must work in vacuum, have a VSWR less than 2.0:1 over the frequency range 700 MHz to 2500 MHz for all propagating waveguide modes, and be capable of dissipating 10 kW.

Using the time domain module of MAFIA various geometries for the HOM load have been investigated and one has been found that can be the basis for a workable design. The load consists of a shaped alumina piece sandwiched between two tapered sheets of a lossy ceramic jointly developed at CEBAF and CERADYNE [3](aluminum nitride filled with 7% glassy carbon), Figure 3. The alumina section draws the field in from the waveguide and in this way couples the fields into the lossy ceramic more efficiently. Preliminary thermal calculations indicate the load will be able to dissipate the design goal of 10 kW. Continued work will be directed at reducing the overall length of the design, investigating the bonding techniques required to build a load with these materials, and building a prototype.

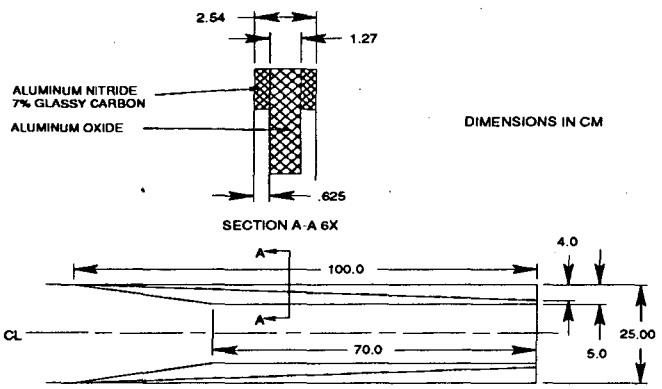

Figure 3. HOM Load Design

VI. COUPLING NETWORKS

Two variations of input coupling networks for 500 kW power transmission are presently being designed and will be tested in the high power test cavity. One will use a coupling loop in a 6.4-inch coaxial line combined with a coaxial window. The coupling factor can be set between zero and 10 by rotating the loop. The coupling of the loop coupler has been measured using an existing PEP coupling loop in a cold test cavity.

The second coupling method will utilize iris coupling and a waveguide window, Figure 4. The coupling of a 2 x 8 inch iris 4 inches deep has been analyzed by calculating Q_{ext} via the Kroll-Lin and Kroll-Yu methods, using data from MAFIA simulations [4],[5], and deriving $\beta=Q_o/Q_{ext}$. The length of the waveguide in the simulation is set to 1/2 wavelength so that two resonant modes close in frequency appear in the output of one MAFIA run. These two modes are the 0 and π mode of the waveguide-cavity coupled resonator system and occur at what Ref. 5 terms the avoided crossing region. The Kroll-Lin method is particularly well suited to the evaluation of large Q_{ext}. The Kroll-Yu method was only used as a rough check. The coupling factor can be varied by inserting exchangeable waveguide quarter-wavelength transformers in-between the coupling iris and the waveguide. Time domain simulations in MAFIA are being used to calculate wall current densities at vacuum joints in the waveguide. A commercial product HELICOFLEX [6] has been selected for a vacuum seal and will be tested to verify its current carrying capability at 500 kW CW power level.

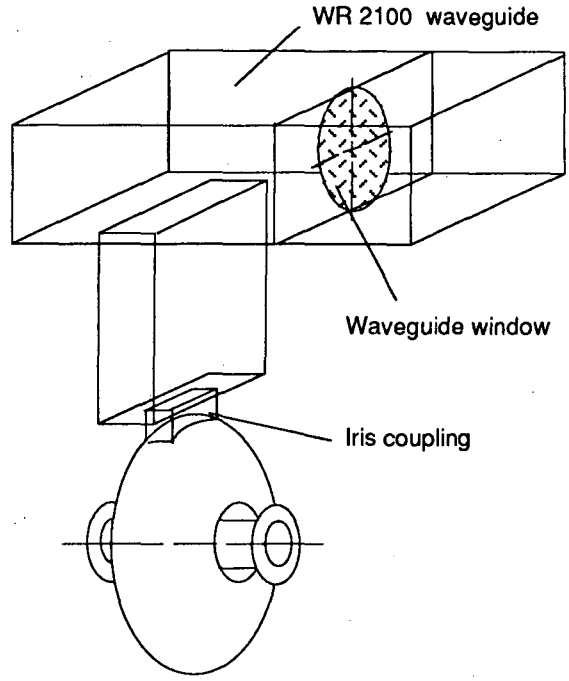

Figure 4. Iris Coupling Network

VII. CONCLUSION

A PEP-II cavity design has been developed using electromagnetic and thermal-mechanical codes to check its design feasibility. The model predicts that the design at the required gap voltage and power can be built and stay within allowable stress limits. A preliminary cooling channel layout has been analyzed on which a final layout will be based. The MAFIA code has been used to calculate the coupling for an iris coupling network. The details of the high power test cavity design are being finalized and a cavity will be built and tested to 150 kW wall power dissipation within the next year.

VIII. REFERENCES

[1] R. Rimmer et. al., "An RF Cavity for the B-Factory", *Proc. PAC*, San Francisco, May 6th-9th, 1991, pp. 819-821.

[2] M. S. de Jong et al, "Mechanical Design Development of a 476 MHz RF Cavity for the PEP-II Asymmetric B-Factory", AECL-10782, Feb. 1993.

[3] I. Campisi, K. Finger, L. Summers, M. Johnson, "Higher Order Mode Damping and Microwave Absorption at 2 °K", *Proc. Third EPAC*, Berlin, March 24-28, 1992

[4] N. Kroll, X. Lin, "Computer Determination of the Properties of Waveguide Loaded Cavities", *Proc. Linear Acc. Conf.*, Albuquerque, NM, Sept 10-14, 1990, Los Alamos Report LA-12004-C, pp. 238-240 (1991). Also SLAC-Pub 5296, July 1990.

[5] N. Kroll, D. Yu "Computer Determination of the External Q and Resonant Frequency of Waveguide Loaded Cavities", *Particle Accelerators*, 1990, Vol.34, pp. 231-250.

[6] HELICOFLEX, Columbia, South Carolina.

LAWRENCE BERKELEY LABORATORY
UNIVERSITY OF CALIFORNIA
TECHNICAL INFORMATION DEPARTMENT
BERKELEY, CALIFORNIA 94720