Presented at the CUBE Symposium,
Lawrence Livermore Lab., Livermore,
CA., October 23-25, 1974

LBL-3417
c.2

DRIFT TUBE ALIGNMENT AND BEAM EMITTANCE CODES IN USE AT THE SUPERHILAC

Duane A. Spence

October, 1974

Prepared for the U.S. Atomic Energy Commission
under Contract W-7405-ENG-48

TWO-WEEK LOAN COPY

This is a Library Circulating Copy which may be borrowed for two weeks. For a personal retention copy, call Tech. Info. Division, Ext. 5545

LAWRENCE BERKELEY LABORATORY
UNIVERSITY OF CALIFORNIA
BERKELEY

LBL-3417
c.2

DISCLAIMER

This document was prepared as an account of work sponsored by the United States Government. While this document is believed to contain correct information, neither the United States Government nor any agency thereof, nor the Regents of the University of California, nor any of their employees, makes any warranty, express or implied, or assumes any legal responsibility for the accuracy, completeness, or usefulness of any information, apparatus, product, or process disclosed, or represents that its use would not infringe privately owned rights. Reference herein to any specific commercial product, process, or service by its trade name, trademark, manufacturer, or otherwise, does not necessarily constitute or imply its endorsement, recommendation, or favoring by the United States Government or any agency thereof, or the Regents of the University of California. The views and opinions of authors expressed herein do not necessarily state or reflect those of the United States Government or any agency thereof or the Regents of the University of California.

DRIFT TUBE ALIGNMENT AND BEAM EMITTANCE CODES IN USE AT THE SUPERHILAC

Duane A. Spence
Lawrence Berkeley Laboratory
University of California
Berkeley, California 94720

ABSTRACT

Two Fortran-IV codes in use at the SuperHILAC have been of significant value in optimizing the geometry of the accelerator and in evaluating the performance of the heavy ion beams. The first routine described is used to determine the existing root mean square deviation of the 210 internal drift tube quadrupoles fitted to a straight line or to a second-order quadratic. It then predicts the minimum number of drift tubes, and their identities, to be moved in order to attain a user-elected margin of error fit. Brief mention is made of the pulsed-wire alignment technique for the quadrupole positioning. The second program described is part of a data system which utilizes a PDP-8/I as a control device for the manipulation of beam-scanning hardware, and a CDC-6600 in an off-line interactive mode which gives the user maximum versatility in treating the raw data and displaying the results of calculations. The code portrays the transverse beam emittance figures and their transmission through the accelerator and transport lines. Also discussed are future plans which include on-line data reduction and CRT display by the PDP-8/I to enable the operators to optimize the tuning of the HILAC.

INTRODUCTION

The heavy ion accelerator at Berkeley (the SuperHILAC) is a linac of the Alvarez type using two electrostatic injectors, one of which injects particles in the mass range of hydrogen through argon, and the other all ions heavier than argon. The linac is composed of two vacuum tanks which are subdivided into eight individually excited cavity resonators. The Prestripper tank is divided into two resonant sections, contains a total of 135 drift tubes, and is 18.5 m long by 3.15 m diameter. The Poststripper has the same diameter, is 31 m long, and contains 77 drift tubes. Quadrupole focusing magnets are housed within all but a few drift tubes. Beam energy is variable from 2.6 MeV/A to 8.5 MeV/A.

The electrical design of the HILAC allows acceleration of heavy ions with charge state-to-mass number ratios in the range 0.046 to 0.5. Virtually all ions of interest must have a charge number greater than +1. The present state of the art for ion sources is such that copious quantities of multiply-charged heavy particles are not obtainable, therefore a high transmission ratio of ions from source to target must be achieved.

Studies of the particle dynamics of the linac cavities show that the magnetic axes of the drift tube quadrupole magnets must not deviate from the machine axis by more than a small amount to minimize the contribution to the radial betatron oscillation amplitude of the beam. The two computer codes considered here, DTPLOT and EMITT, have been developed to deal directly with the problems of drift tube alignment and beam transmission through the accelerator. Both codes have been written in Fortran IV and can run using either the RUN76 or the MNF compiler at Berkeley.

The alignment code, DTPLOT, was written to graphically portray the positions of the focusing quadrupoles housed within the shells of the drift tubes, and to predict the best axis through the machine obtained by moving the least number of drift tubes to achieve a given r-m-s deviation.

Each of the constituent particles of the beam possesses space and momentum coordinates and can be thought of as a point in a 2n-dimensional phase space. For our purposes we examine the particle's behavior in the horizontal and vertical two-dimensional subspace containing the transverse position coordinate, x or y, and the transverse momentum coordinate.

The latter is normally expressed in terms of the angles x' and y' in the two planes, respectively. The area of the locus of all particles in each of these planes is called the emittance of the beam. EMITT produces the emittance diagram of the ion beam and computes its area.

DRIFT TUBE ALIGNMENT

The pulsed-wire alignment technique as developed at the HILAC[1] is basically a wire stretched through a linac tank and suspended at each end from a movable support table. Tension is provided by passing one end over a frictionless pulley and applying sufficient weight to insure that the natural sag of the wire is less than the radius of the clear aperture. The coordinates of the wire at each end table are read by dial-indicator micrometers. A schematic diagram which includes the coordinate system orientation is shown in Figure 1.

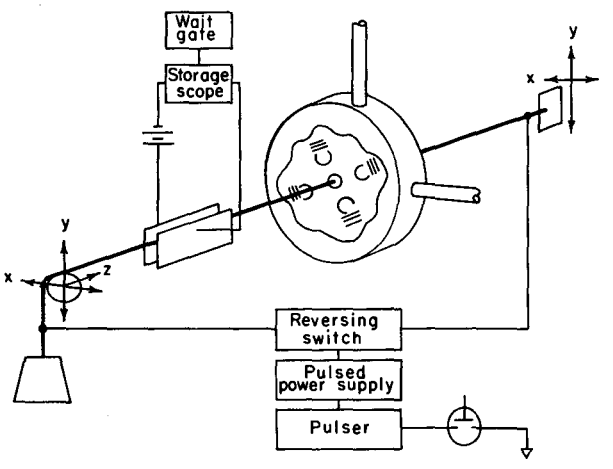

XBL7410-4405

Fig. 1. Schematic diagram of the pulsed wire alignment system. For simplicity the second pair of detector plates is not shown.

One quadrupole at a time is excited to a dc value, and a current pulse, which is short compared to the fundamental oscillation period, is sent through the taut wire. Depending on the direction of current flow, the wire moves away from one of the transverse magnetic axes, with an amplitude proportional to its displacement from the axis. Both transverse planes are aligned independently by reversing the polarity of the pulsed current.

Subsequent to the pulse, the wire movement degenerates into the numerous harmonics characteristic of a "plucked string". The direction of the initial deflection, however, indicates on which side of the magnetic axis the quiescent wire lies. A change in the direction of wire deflection can be detected for drift tube movements of less than 0.001 in.

Observations of the wire deflections can be made visually, but for systems with numerous quadrupoles the task is time consuming and extremely fatiguing. An electronic detector has therefore been incorporated in the measuring system. Four parallel conducting plates 8 inches long are positioned symmetrically around the wire. The amplified difference of the voltage pick-up of the vertical pair of plates is fed to the vertical deflection of a storage scope, and similarly for the horizontal pair. A wait-gate is used in the enhancement circuit of the scope to brighten the trace only during a portion of the initial wire movement. For each pulse the stored scope trace is a line from the origin in a direction matching that of the wire, and its length, at a fixed gate width, is a measure of the deviation from the axis.

Measuring the location of a drift tube bore requires making identical movements of the end-support tables until pulses of both polarities result in no movement of the wire. At this point the micrometer readings at each table are compared and are recorded as the x-y coordinates for that drift tube. The longitudinal coordinate, along the z-axis, is also measured for each drift tube and tabulated. Conversely, to align a drift tube, both support tables are adjusted to the prescribed x-y values and the drift tube itself is translated, keeping z constant, until the wire nulls. The position is verified by moving the wire randomly off axis and renulling it.

The longer of the two linac tanks at the HILAC has a clear aperture radius of 0.75 inches. A tungsten wire 0.005 inches in diameter with a tensioning weight of 2.2 kgm results in a maximum sag of about 0.5 inches for the various wires used during the alignment program.

Beam optics program results indicated the r-m-s deviation for the transverse alignment must be within .005 inches. Position checks made on successive days by separate crews gave readings which differed

by less than 0.001 in. Spot checks made by the same crew showed repeatability to about 0.0007 inch. The smallest graduation on the table micrometers was 0.001 inch.

The pulsed current was of the order of 3 to 5 amperes for about 25 msec. Each drift tube was excited to approximately its maximum field strength (60 Kg in the Prestripper and 25 in the Poststripper)for alignment by eyeball, but only to about one-third of maximum for measurement by the capacitive sensor.

DTPLOT CODE

Input data for the alignment code DTPLOT is in the form of punched cards and library stored files. The permanently stored data is common to all alignment calculations and consists of the drift tube axial spacing, the identities of non-quadrupole drift tubes, tank lengths, etc. Punched card input data is used for those parameters which change for each run, such as options for curve fitting and for plotting, margin of fit, and the identities of drift tubes not measured. All fortran "READ" commands expect data in a free format and a subroutine decodes the input for usage by the program.

It was found that it was quicker to enter the measured coordinates of the quadrupole axes into a storage file, using the Berkeley PTSS System, rather than punching them on cards. This allows listing and editing capabilities for the raw data, and decreases the size of the input card deck. Future plans include the automatic recording of data points which would greatly speed up the measuring process and the time spent editing out errors.

The first computation of concern by the code is to find the vertical sag of the natural catenary curve to which the wire conforms, in order that it may be subtracted from the measurements to normalize them to a straight line. A parabolic equation is substituted for the true catenary, since it describes the sag to within 10^{-5} in. for the wires and tension used. Defining the origin at the center of the span we have

$$y = \frac{\rho z^2}{2W} \qquad (1)$$

where ρ is the wire mass per unit length in grams/inch, z is the distance from the center in inches, and W is the mass of the tensioning weight in grams.

Rearranging eq. (1) gives a constant which I define as the wire-constant, K. It is given by

$$K \equiv \frac{\rho}{2W} \qquad (2)$$

therefore

$$y = Kz^2 \qquad (3)$$

The value of the wire-constant for a given data set is obtained from input information, derived from experiments conducted under controlled conditions. However, careful weighing of an unknown but similar wire and of the weight used have proven to be sufficient to predict its behavior.

Once the catenary sag has been subtracted from the measured points, the data is fitted to the best straight line and/or parabola in each plane independently, according to the users input option. Additionally if the second-order fit is elected, the data is fitted in the vertical plane without removing the sag. Curves of order higher than one are valid alignment curves for the drift tube axes in a linac, provided the betatron oscillation wave length is short in comparison to the period of the quadratic. However, for purposes such as optical sighting, linacs are usually aligned to straight line axes.

The least squares process is used for curve fitting in DTPLOT and is sometimes referred to as the chi-squared minimization method. There are many good texts which discuss the method in detail.[2-4] The following discussion is confined to the horizontal plane since the vertical is treated identically. In essence we assume that the data set is a sample of points about some parent distribution, which using the horizontal plane coordinates, gives the actual value as

$$x(z) = a + bz + cz^2 \qquad (4)$$

For any data point we can calculate the probability for getting the measured value, assuming a Gaussian distribution of the measured value about the true value x(z). For N data points, the probability for the whole set is given by

$$P(a,b,c) = G \exp\left(-\frac{1}{2}\Sigma\left(\frac{\Delta x_i}{\sigma}\right)^2\right) \qquad (5)$$

where G is a constant independent of the values of a, b, and c, Δx_i is the deviation between the measured and true point, and σ is a standard deviation equal for all points.

To maximize the probability, eq. (5), we must minimize the summation in the exponent, thus finding the least squares. We can define

$$\chi^2(a,b,c) \equiv \Sigma\left(\frac{\Delta x_i}{\sigma}\right)^2 = \Sigma\ (\sigma^{-2}(x_i-a-bz_i-cz_i^2)^2) \tag{6}$$

From the calculus we know that the minimum value for χ^2 will occur where all the first partial derivatives with respect to the coefficients are simultaneously zero, yielding upon rearrangement

$$\begin{aligned} \Sigma x_i &= aN + b\Sigma z_i + c\Sigma z_i^2 \\ \Sigma z_i x_i &= a\Sigma z_i + b\Sigma z_i^2 + c\Sigma z_i^3 \\ \Sigma z_i^2 x_i &= a\Sigma z_i^2 + bSz_i^3 + cSz_i^4 \end{aligned} \tag{7}$$

where the summation is over the N data points.

Thus we have three equations in the three unknown coefficients, a, b, and c. It is a simple matter for the code to make the summations, solve for the unknowns using the usual pivotal methods, and calculate the best axis by substituting appropriately into equation (4).

The r-m-s deviation is given by the relation

$$RMS = \sqrt{\frac{\Sigma\Delta x_i^2}{N}} \tag{8}$$

where

$$\Sigma\Delta x_i^2 = \Sigma x_i^2 - (\ a\ \Sigma x_i + b\Sigma z_i x_i + c\Sigma z_i^2 x_i) \tag{9}$$

using the same summations as used for the coefficients.

The final computations performed by DTPLOT concern the moving of the drift tubes to the best axis. It should be noted that as soon as an off-axis drift tube is moved to the best axis, a new r-m-s axis is generated due to the deviation of that element having gone temporarily to zero.

The magnet with the largest deviation is "moved" until subsequent repositioning achieves less than a given margin of improvement to the r-m-s error, and then more units are successively added to the growing group being repositioned until the r-m-s deviation is within specifications for each plane. Calculation of the new best axis is done after each "move", because the movements contain a built-in error to more realistically represent the true conditions. An error of constant magnitude (0.002 in.) was used, and was introduced as overshoot to maintain the randomness of the initial deviation.

Line printer output consists of data tables listing the measured positions, deviations, and final best axis coordinates at each drift tube. It also lists the identity of each magnet repositioned, in numerical order, and in the order it was moved. The cal-comp output consists of two graphs showing the measured points in each plane scaled along the longitudinal axis and the best axes as calculated from the measured (non-repositioned) data. One of these plots is shown in figure 2. A third plot graphs the deviations about the best axis. (Fig 3).

EMITTANCE MEASUREMENTS

The HILAC and its transport lines can be regarded as a system of apertures along the beam path. The admittance of these apertures is the area in x-x' and y-y' space that the beam emittance may fill without being clipped off. The collective acceptance of the system, as a function of the tuning configuration of the accelerator, is determined by measuring the transmitted emittance at selected points along the machine.

The hardware schematic for emittance measuring is shown in Figure 4. Two slits, each 0.050 wide by 2.0 in. high, are moved laterally across the beam at the output of the electrostatic injectors. The first slit is stepped to successive positions at intervals of 0.025 in., while the second slit moves uniformly back and forth across the collimated beam, one pass per step of slit-1. The beam transmitted by the slit

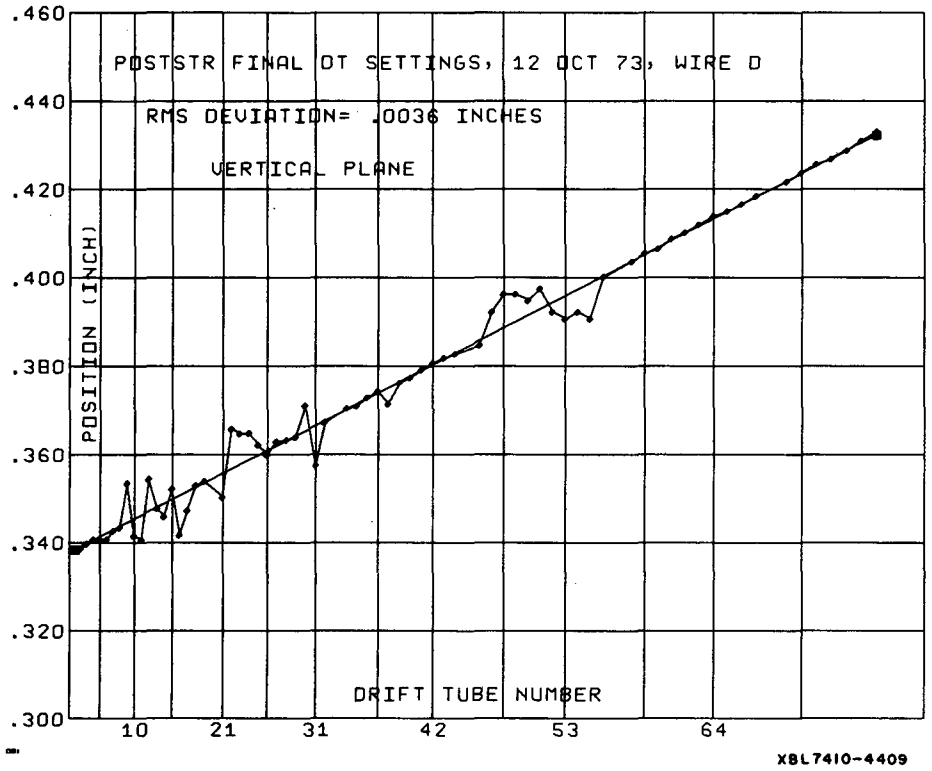

Fig. 2. A cal-comp plot from the program DTPLOT showing the poststripper drift tube measured locations in the vertical plane and the least-squares-fitted straight line axis.

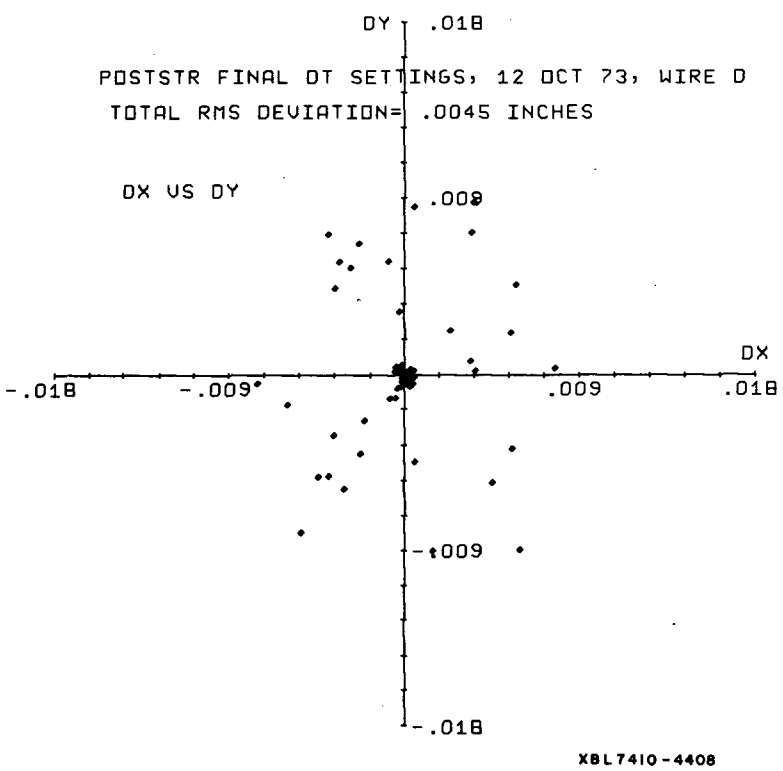

Fig. 3. The deviations in the horizontal and vertical planes plotted to show if the data points are randomly distributed about the best axis, which is at the origin.

system is captured by a faraday cup. The two planes are measured independently.

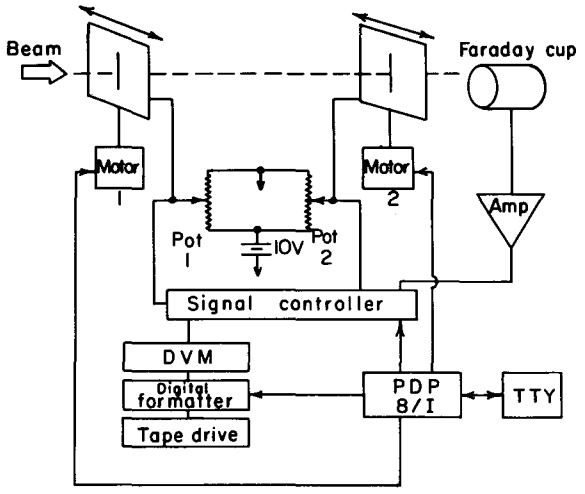

XBL7410-4406

Fig. 4. A schematic diagram of the emittance measuring system. The slits are spaced approximately 12 in. apart, and would be rotated 90 degrees about the axis to measure the vertical plane.

The resulting beam intensity profiles are digitally recorded on magnetic tape for off-line interpretation by the EMITT program. The position of the two slits is controlled by a PDP-8/I in a semi-automatic mode. The user terminates each scan cycle of the slits by striking the space bar of the TTY, whereupon the 8/I automatically moves the stepping slit one increment, reverses the scanning slit direction and controls the flow of data to the tape. Attempts to make the scanning sequence fully automatic have so far only been partially successful due to instabilities and noise in the beam and in its readout circuits.

Measurement of the transmitted emittance is accomplished by scanning the beam at the ground end of an injector and reading the first faraday cup located downstream. Next, that cup is removed and one further downstream is inserted and again a scan series is done. This process is repeated for as many cups downstream as desired, without altering the accelerator tuning. The results of these scans show the beam emittance at the slit position and the surviving area at each downstream cup location after the beam has negotiated the intervening components of the accelerator. Losses of the phase area are attributed to misalignment and/or mistuning of the transport elements.

Transmission efficiency through the linac to date has been as high as 95%, and better than 80% to a target 10 m beyond the Poststripper.

EMITT Code

The resources invested in each emittance run and reduction of the data off-line have necessitated the development of a highly interactive code which allows random access to the raw data and the reduction processes in order to prevent needless crashes of the program during execution, and to insure useful emittance diagrams. In addition to TTY printout of any desired information, a TTY-plot subroutine allows graphing of the emittance on the terminal. A faster method allows the user to plot the figures on the CRT of a Vista console, if available.

Beam intensity as read from the logarithmic current amplifier is decoded by the expression

$$\text{Current } (\mu\text{amps}) = \text{Exp}\ \frac{((FC-5.0)\ln(10))}{5.0}$$

where FC is the faraday cup reading in volts. Beam currents of 0.001 μamp to 10 μamp correspond to the micro-ammeter output of -10 to +10 volts.

Construction of the emittance figure is accomplished by extracting position and angle information in the following way. The gaussian-like peak beam profile from scans of slit-2 is numerically integrated to establish values for the desired contours. (Each contour is interpreted to mean that it surrounds that percentage of the total beam). Next, each profile is examined for the two slit-2 positions on either side of the peak where the intensity equals the proper value. (Fig. 5a, points A, B; C, D; E, F; etc.) Since the slit-1 location is also known these two positions are converted to angles and plotted with the absissa equal to the slit-1 position (Fig. 5b, points A, B, C, D, E, F, G, H, J, K on the eclipse.) The area within any contour is computed by adding the areas of the dotted rectangles bounded on each side by the half-distance to the adjacent points and at the top and bottom by the angle values.

The plots also graph the areas for contours at 10% intervals from 10% through 90%, normalized to the 90% area. Data errors are clearly shown by this curve.

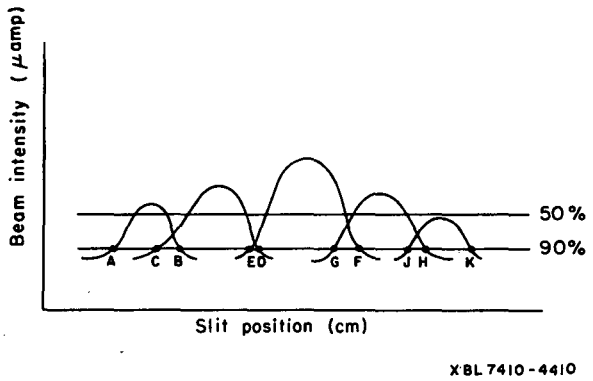

Fig. 5a. The bell shaped curves of beam intensity vs. scanning slit (#2) position. Each curve is generated when the stepping slit (#1) is repositioned and slit #2 moves once across the collimated beam.

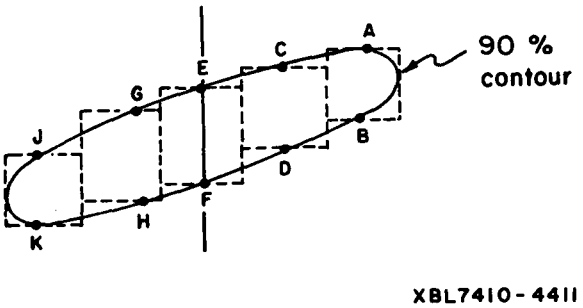

Fig. 5b. The 90% emittance contour constructed from the positional information contained in fig. 5a.

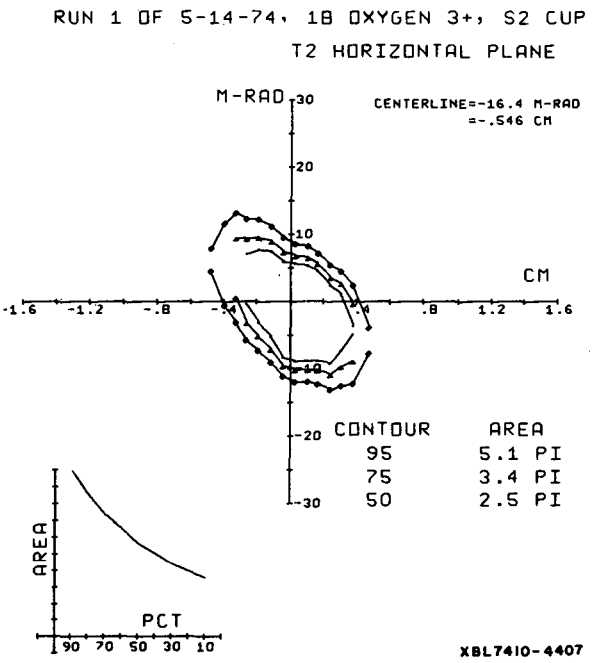

Fig. 6. A cal-comp plot from the program EMITT showing the emittance figure and area of each contour plotted. The contour intensity profile is plotted in the lower left corner.

Figure 6 is a typical emittance plot. This plot would be compared to similar figures, derived from faraday cups at other locations, to extract the transmission information. Figure 7 is an overlay of typical samples of such figures.

Printed output consists of tabular data of all interactive commands and processes initiated by the user as well as complete data file printout. It is usually recorded on microfiche film. Plotted output is small enough for retaining in a standard size binder, and the figures are automatically centered on the two axes.

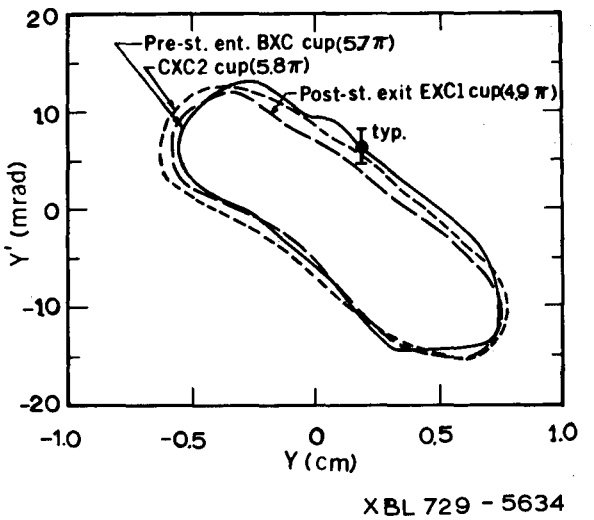

Fig. 7. An overlay of the emittance transmitted to the prestripper entrance, the poststripper entrance, and to its exit. The ratio of the areas shows that the transmission through the prestripper is almost 100%, and to the post-stripper exit is 84%.

IMPROVEMENTS

For the emittance studies to achieve their proper place as a tuning aid, the entire process must be accomplished in less than one minute, an order of magnitude faster than presently possible. Heavy ion beams which intrinsically lack intensity dictate sensitive beam detection devices with sort time constants. Our existing digital formatter and tape drive have a turn around time of about 150 msec per data point, chosen to be compatible with the 150 msec RC-time constant of the log micro-ammeter.

In the near future we intend to have an on-line real time program running in the PDP-8/I which will use signals from its own A/D converters, displaying the emittance figures on a Tektronix 4023 terminal as well as a TV monitor screen at the HILAC control console. Electron multiplier tubes will serve as the beam intensity readouts.

ACKNOWLEDGEMENTS

Special tribute must be paid to the operating crew of the HILAC who patiently and carefully aligned the drift tubes. Much of the excellent results are due to R. Stevenson who organized and led the effort. My thanks also go to R. Benjegerdes who provides the necessary support for the PDP-8/I hardware and software.

Work done under the auspices of the Atomic Energy Commission.

REFERENCES

1. R. M. Main, Alignment of Drift tube Quadrupole Lenses Using a Pulsed Wire, Lawrence Berkeley Laboratory Report LBL-1224, Sept. 1972.

2. J. R. Wolberg, Prediction Analysis, D. VanNostrand Co., Inc., 1967.

3. S. S. Kuo, Numerical Methods and Computers, Addison-Wesley Publishing Co., 1965.

4. P. R. Bevington, Data Reduction and Error Analysis for the Physical Sciences, McGraw-Hill, 1969.

LEGAL NOTICE

This report was prepared as an account of work sponsored by the United States Government. Neither the United States nor the United States Atomic Energy Commission, nor any of their employees, nor any of their contractors, subcontractors, or their employees, makes any warranty, express or implied, or assumes any legal liability or responsibility for the accuracy, completeness or usefulness of any information, apparatus, product or process disclosed, or represents that its use would not infringe privately owned rights.

TECHNICAL INFORMATION DIVISION
LAWRENCE BERKELEY LABORATORY
UNIVERSITY OF CALIFORNIA
BERKELEY, CALIFORNIA 94720