LBL-34239
UC-413

Lawrence Berkeley Laboratory
UNIVERSITY OF CALIFORNIA

Presented at the International School Seminar on Heavy Ion Physics, Dubna, Russia, May 10–15, 1993, and to be published in the Proceedings

Future Prospects for Radioactive Nuclear Beams in North America

J. M. Nitschke

May 1993

NUCLEAR SCIENCE DIVISION

Prepared for the U.S. Department of Energy under Contract Number DE-AC03-76SF00098

DISCLAIMER

This document was prepared as an account of work sponsored by the United States Government. Neither the United States Government nor any agency thereof, nor The Regents of the University of California, nor any of their employees, makes any warranty, express or implied, or assumes any legal liability or responsibility for the accuracy, completeness, or usefulness of any information, apparatus, product, or process disclosed, or represents that its use would not infringe privately owned rights. Reference herein to any specific commercial product, process, or service by its trade name, trademark, manufacturer, or otherwise, does not necessarily constitute or imply its endorsement, recommendation, or favoring by the United States Government or any agency thereof, or The Regents of the University of California. The views and opinions of authors expressed herein do not necessarily state or reflect those of the United States Government or any agency thereof or The Regents of the University of California and shall not be used for advertising or product endorsement purposes.

Lawrence Berkeley Laboratory is an equal opportunity employer.

LBL - 34239

Future Prospects for Radioactive Nuclear Beams in North America*

J. Michael Nitschke

Nuclear Science Division, Lawrence Berkeley Laboratory
University of California, Berkeley, California 94720, USA

May 1993

This work was supported by the Director, Office of Energy Research Division of Nuclear Physics of the Office of High Energy and Nuclear Physics of the U.S. Department of Energy under Contract DE-AC03-76SF00098

Proceedings of the International School Seminar on Heavy Ion Physics
May 10–15, 1993, Dubna, Russia

Future Prospects for Radioactive Nuclear Beams in North America*

J. Michael Nitschke
Lawrence Berkeley Laboratory, University of California
1 Cyclotron Road, Berkeley, California 94720 USA

1. INTRODUCTION

Since the late 1920s our understanding of the nucleus has been intimately linked to the development of particle accelerators. The first nuclear reaction was carried out in 1930 by Cockcroft and Walton using protons accelerated to 300keV in the reaction ^{7}Li(p,2α). Subsequent developments progressed in two directions, heavier masses and higher energies. While heavier projectiles opened new vistas in the synthesis of new elements, the study of high spin phenomena, and the exploration of the nucleon drip lines, to mention only a few, higher energies allowed the study of nuclei at higher temperatures, the equation of state of nuclear matter, and ultimately collective phenomena resulting from the melting of the hadronic phase that may give rise to a plasma consisting of quarks and gluons.

A comparison between the chart of nuclides and nuclear model calculations shows that we know of the existence of only ~1/3 of all bound nuclei. Detailed nuclear structure information is limited to a narrow band of nuclei near the line of β–stability. One of the reasons for this is that, thus far, we have been limited experimentally to projectiles and targets of stable nuclei, due, in the past, to the technical difficulties of producing radioactive nuclear beams (RNB) with intensities sufficient for meaningful experiments.

Developments in the last two or so decades have changed this situation drastically. For the ISOL (Isotope Separator On–Line) method of producing RNBs high energy proton accelerators are now able to deliver primary beam intensities that are higher than can be handled with existing target technology. Sources with high efficiencies and selectivity for singly and multiply charged ions have been developed, magnetic spectrometers with high resolution and transmission can now be built, and post–accelerators with excellent beam quality, duty factor, and transmission are in routine operation. Conversely, high–energy, high–current heavy ion accelerators can provide secondary RNBs with sufficient intensity via projectile fragmentation. In addition, experimental equipment has improved in efficiency, resolution, and acceptable data rates by several orders of magnitude.

In 1989 this author proposed the construction of a dedicated, flexible, radioactive nuclear beams facility that would provide intense beams of nearly all elements for a program of scientific studies in nuclear structure, nuclear reaction dynamics, astrophysics, high-spin physics, nuclei far from stability, material- and surface science, and atomic- and hyperfine-interaction physics. The initial name proposed for the new facility was "IsoSpin Factory" to underscore the key feature of this new physics tool; it was later changed to "IsoSpin Laboratory" (ISL). The ISL is now supported by a broad base of nuclear scientists and has been identified in the US Long Range Plan on Nuclear Science as one of the new potential construction projects for the second part of this decade. Since 1989 a number of conferences and workshops has been held in which the scientific and technical case for RNB facilities has been made. [1-5] An overview of existing and planned RNB facilities world-wide has been presented recently in ref. [6]. The purpose of this paper is to focus on the North American plan for the ISL, which was initially summarized in a "White Paper"[7] but has since evolved in its scientific and technical scope.

2. SCIENTIFIC SCOPE

The ISL is based on the coupling of two accelerators: the first to deliver a high current light ion beam to a thick, hot spallation- or fission target and the second to accelerate the emanating radioactive species to energies in the range from a few keV to ~25MeV/u with excellent beam qualities, typical of modern heavy ion accelerators. These beams will facilitate a large panoply of experiments in nuclear- and astrophysics and in the applied sciences.

2.1 Nuclear Structure

One of the striking features of radioactive beam science is that the large number of stable and radioactive beam- and target combinations allows the systematic study of nuclear properties over long isotopic- and isotonic chains. It will be possible to create nuclei with exotic matter distributions and follow the evolution of nuclear shapes and nuclear structure from closed shell to closed shell and beyond, as in the case of $\sim^{100}$Sn to $>^{132}$Sn.

The topics in nuclear structure are too numerous to discuss here in detail; a partial list includes:

> study of shell model states near singly and doubly magic nuclei through single particle transfer reactions,
>
> nuclear structure near N=Z, including neutron-proton pairing correlations, nuclear shapes, and Coulomb energy effects, mirror nuclei, superallowed β-decay, and tests of shell-model predictions near ^{100}Sn and other closed-shell nuclei,
>
> Coulomb excitation of unstable nuclei, giant resonances,

new collective modes, octupole-, oblate- , and triaxial deformations,

synthesis of new neutron-rich nuclei in the trans-uranium region, and new attempts at the synthesis of super-heavy elements,

nuclear structure near the drip lines,

high-spin physics, new regions of extreme nuclear deformation and configurations,

ground-state properties of exotic nuclei: masses, spins, moments, radii, skins and halos, and

charged-particle- and cluster radioactivity, including β-delayed radioactivities.

An overview of nuclear physics with radioactive beams was given by Warner in ref. .[4]

2.2 Nuclear Reactions

Radioactive projectiles remove the restraint to the natural N/Z ratios of stable beams in nuclear reactions. The extended wave functions of loosely bound nuclei near the drip lines (skins and halos) may result in entirely new reaction processes such as the free flow of neutrons in sub-barrier fusion reactions ("neck formation"). Conversely, the same processes will yield information about nuclear wavefunctions, and the diffuseness and skin thickness of the outer nuclear optical potential. By combining exotic projectiles and/or targets, large reaction Q-values can be achieved that may lead to enhanced cross sections and the possibility of multiple (sequential) neutron transfers.[8] Similarly, large probabilities for pair transfer will allow the study of collective effects resulting from the nuclear pairing field.[9] One could, perhaps, hope to find a nuclear analogue to the Josephson effect.

Mapping of the fission-energy vs. deformation surface could be attempted by studying the fusion ("inverse fission") of two nuclei with special nuclear structure, i.e., near the doubly magic ^{132}Sn, leading to isotopes of Fm. Elucidating this process could point to reactions conducive to the formation of super-heavy elements. Other experiments directed towards an understanding of the fission process in heavy nuclei would involve the formation of currently not reachable nuclei with heavy RNBs on light stable targets in inverse kinematics, i.e., d(^{209}Th,p). The fission exit channels have high cross sections and are easily detectable with high efficiency. A unique feature of the ISL will be the production of *isomeric* beams and targets allowing reaction studies based on high spin states such as in $^{178}Hf^{16+}$.

Classical elastic scattering experiments are ideally suited for low beam intensities. When carried out with a series of RNB isotopes they would reveal the spin- and isospin dependent nature of the nuclear potential. Large impact parameter scattering between mirror nuclei could be used to search for the pion content of nuclei without interferences due to non-zero Q-values in ordinary nuclei.[10] An example of a possible reaction is $^{18}Ne + ^{18}O$.

It is obvious that, because of the low beam intensities, many nuclear reaction studies with RNBs will be carried out in inverse kinematics, which will lead to high detection efficiencies. However, sufficient energy is needed to study highly asymmetric systems like $d(^{132}Sn, p)^{133}Sn$.

2.3 Astrophysics

The importance of RNBs for astrophysics stems mainly from the fact that in hot stellar environments many of the interacting nuclei are radioactive and that reactions with radioactive beams and targets could previously be studied in the laboratory only with difficulty. Such studies are, however, essential for the understanding of several stellar phenomena such as the hot CNO cycle, the rp-, s-, r-, and p-processes, and primordial nucleosynthesis, the big bang, as well as the energy balances of stars. Required are measurements of cross sections, reaction rates, masses, half-lives, β-strength functions, and decay properties. For the r-process the crucial experiments involve nuclei near the n-dripline, for the rp-process near the p-drip line, and for the s-process near β-stability. Spectroscopic measurements are also needed to interpret data from γ-ray observational astronomy.

Astrophysical RNB experiments face special challenges. Measurements of nuclear reaction rates far below the Coulomb barrier can have cross sections in the nanobarn or picobarn range, the width of important resonances may be very small (~meV or less), the n-drip line can only be reached for the lighter nuclei, and for many neutron-rich nuclei even basic ground-state properties like mass and half-life are not known. For these and other reasons astrophysical experiments may pose the highest demands on the performance of the ISL, for example, maximum beam energies of 15-25MeV/u for inverse kinematics, small energy spread, beam purities $\leq 10^{-5}$, and absolute energy calibrations to a few keV/u.

2.4 Atomic Physics and Material Science

Intense, pure beams of radioactive ions of many elements, with variable energies and of isotopes with different half-lives can become of great importance in materials research. This is based on the observation that a radioactive nucleus implanted in a host material will sense its electromagnetic environment via the hyperfine interaction and may reveal the characteristics of this environment in its decay features. Precise three-dimensional localization of implanted ions in a large variety of matrixes - including insulators - can be obtained. Concentrations can be varied over many orders

of magnitude and solubility limits can be exceeded. The usual alloying rules and limitations, in general, do not apply to implantation processes and metastable systems and exotic alloys may be formed. Radiation damage may change the properties of the target in ways that can not be achieved by other means, creating new phases and materials. These processes can be studied through a number of research techniques:

- on-line nuclear orientation
- NMR spectroscopy
- Mössbauer spectroscopy
- perturbed angular correlations
- channeling of charged particles
- high-resolution conversion electron spectroscopy
- positron analysis
- nuclear reaction analysis
- use of radio tracers.

For some of these techniques polarized RNBs are desirable. An overview of the potential of radioactive ion beams in material science is given by Sawicki in ref. [2].

3. TECHNICAL REALIZATION

It was already pointed out that there is a strong scientific justification for a flexible RNB facility in North America. Another compelling fact for the timing of the ISL initiative is that there have been technological advances that make the production of *high intensity* RNBs feasible thereby allowing experiments to be conducted on a reasonable time scale. Some of the features of the ISL that are based on these advances will be discussed below.

Numerous interactions in the form of conferences, workshops, symposia, seminars, and private contacts between potential users have resulted in the following set of specifications for the ISL:

Primary Beam Accelerator:

Particles:	p, (d, ^{3}He)
Energy:	0.5 – 1 GeV
Intensity:	100 – 200 μA (protons)
Beam structure:	CW (or pulsed ≧1% D.F.)
Emittance $\varepsilon_{x,y}$:	≦ 10 π mm mrad

Target:

Matrix:	solid or liquid
Thickness:	~1 mol/cm^2
Power:	≦ 40 kW
Production Luminosity:	$(4 - 8)\times10^{38}$ s^{-1}cm^{-2}

Post-Accelerator:

Energy Range:	0.2 – ~25 MeV/u
Intensity Range:	$<10^2$ – $>10^{11}$ pps
Mass Range:	1 – 240 u
Z Range:	1 – 93
Beam Purity:	$<10^{-4}$ ($\leq 10^{-5}$ for nucl. astrophys.)
Macro Beam Structure:	DC (or pulsed $\geq$25% D.F.)
Micro Beam Structure:	~ 100 ns (for TOF)
Energy Resolution:	0.1 – 1%
Emittances $\varepsilon_{x,y}$:	$\lesssim 1\ \pi$ mm mrad
Emittance ε_z:	~ 20 – 50 keV ns
Transmission:	>90% (excl. stripper losses)

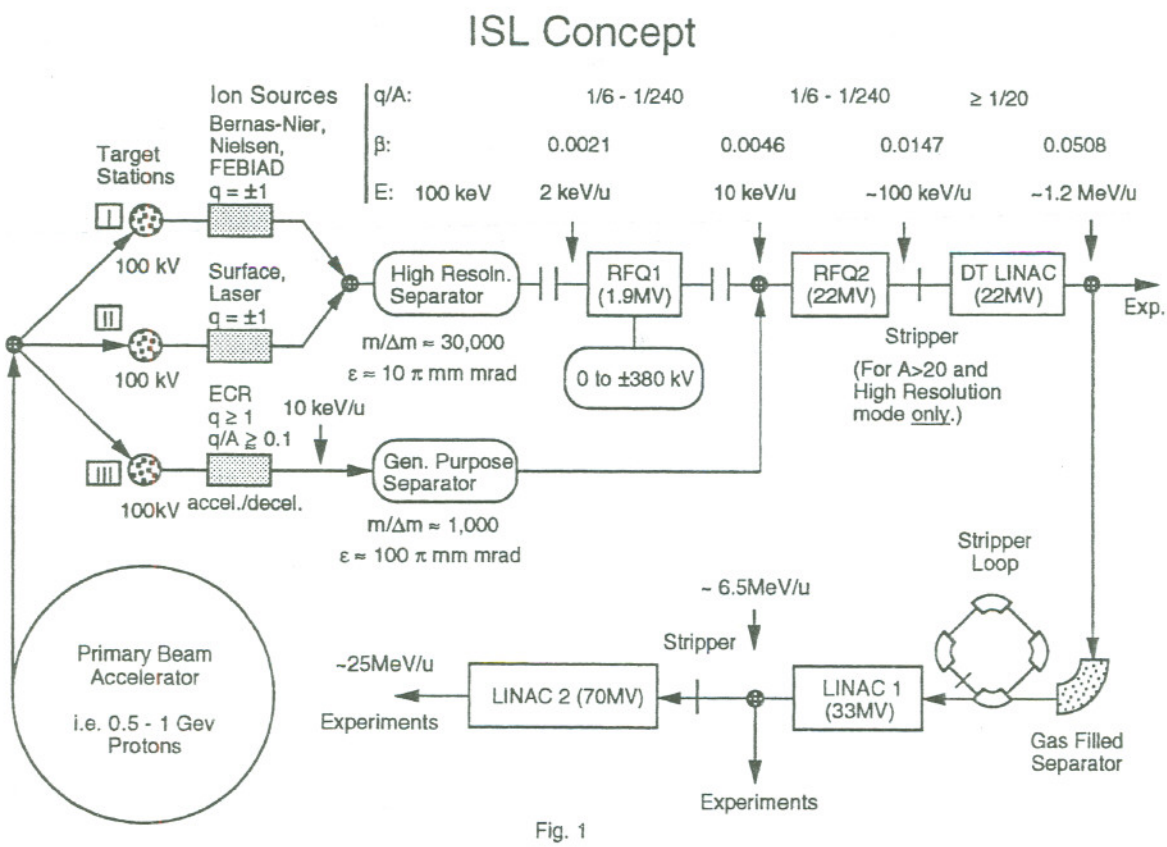

Fig. 1

To demonstrate that it is technologically feasible to reach these specification the ISL steering committee has evolved a BenchMark Facility (BMF) which is intended as a base line for discussion and against which other technical solutions can be compared.[7] The BMF is not necessarily the way the ISL will

be built, since details of the design will depend on the infrastructure and preferences of the host laboratory and future technical developments. A revised version of the BMF is shown in fig. 1. In the following, sections of the BMF will be discussed in more detail.

3.1 Primary Beam Accelerator

The site for the ISL has not been decided since the ISL is not an approved project within the Department of Energy at this time. There are two potential sites in North America that have primary beams of sufficient energy and intensity to meet ISL specifications, TRIUMF and LAMPF. Other laboratories would have to build a new accelerator for protons and/or light ions. Different options for such accelerators were reviewed recently by Jongen in ref. [5]. They fall in several broad categories: LINACs, isochronous cyclotrons, Fixed Field Alternating Gradient (FFAG) machines, and synchrotrons.

LINACs can provide primary beam energies and intensities that exceed the ISL requirements. They are reliable and the technology is well understood. Their beam emittances and duty factor are acceptable. Past experience has shown that LINACs may be more expensive to build and operate than other option. This, however, may have to be reevaluated in view of modern designs.

Isochronous cyclotrons have been built for positive and – in the case of protons – negative ions. Normal- and superconducting versions are in operation and the CW beam structure is ideally suited for the ISL. Positive ion cyclotrons can be designed for proton beams of $\leq$1000MeV and $\leq$1mA. A cost effective machine for 600MeV is discussed by Clark in ref. [11]. Cyclotron technology is well understood and new designs pose little technical risk. Flexibility in ion species and energy is difficult to achieve and expensive for machines of the size needed for the ISL. Internal- and external ion sources can be used. Ring cyclotrons, a variant of the classical isochronous cyclotron, are particularly well suited for high intensities; they are, in general, preceded by a small injector cyclotron.

Negative ion (H^-) cyclotrons are, for practical reasons, limited to energies of ~600MeV. They can provide multiple beams with independently variable energies and intensities. Because of electromagnetic stripping the magnetic field strength is limited and the machines tend to become relatively large and can get activated due to unavoidable stripping losses.

The weight and cost of cyclotrons as functions of energy rise faster than linear, while they are approximately linear for LINACs.

In the family of cyclotrons and synchrotrons several combinations of fixed/variable field, fixed/modulated frequency, and weak/strong focusing are possible. Most modern cyclotrons are of the fixed field, strong focusing, and fixed frequency variety. An FFAG has a fixed field, strong focusing, and *variable* frequency. It is a ring accelerator and requires an injector; typical cycling frequencies are in the range of 100–3000Hz. Its beam intensities are less than those from cyclotrons but higher than from Rapid Cycling Synchrotrons

(RCS). As ISL primary beam machine its pulse structure is less favorable than that of a cyclotron and better than that of an RCS. The main disadvantage of FFAGs is that no full-scale model has ever been built.

Rapid cycling synchrotrons can deliver energies and intensities that are almost ideally matched to the requirements of the ISL. Their main draw-back is the micro-structure of the beam, consisting of short (<1μs) pulses of high current with repetition rates of 10-60 Hz. This puts a pulsed load of several amperes on the target and has to be taken into account in the design of the front-end of the RNB facility. To avoid the high current pulses the magnetic field of the RCS can be clamped on alternate cycles resulting in a 50% duty factor with the penalty of a 50% reduction in average beam current.

3.2 Target/Ion Source and Mass Analysis

The combination of target and ion source has often been called the heart of an ISOL-based RNB facility, because any gains or losses that occur at this stage of RNB production affect directly the final RNB intensity. Since most RNB experiments will be limited by the available beam currents the duration of an experiment will be inversely proportional to the beam intensity (everything else being equal), which again underscores the earlier statement that *intensity* is of utmost importance. The critical parameters are the release efficiency of the target and the ionization efficiency of the ion source. In a high intensity RNB facility it is also important that as few unwanted elements as possible are released from the target to minimize subsequent contamination of the isotope/isobar separator and the front end of the post-accelerator. There is considerable experience in tick-target technology notably from the ISOLDE group at CERN [12]; however, the ISL will have to extrapolate to beam power levels that are almost two orders of magnitude higher, which will require considerable R&D efforts.

A variety of ion sources is available for on-line operation. As shown in fig. 1 at least three target stations are envisioned for the ISL. This number was not only chosen to provide operational continuity during target changes but also to accommodate different types of sources. In the case of ECR sources, for example, it will be necessary to protect the permanent magnets from the direct radiation from the target by a thick shield of heavy metal and iron. Since Laser ion sources have particular importance for the ISL because of their high selectivity a separate target stations will be dedicated to multi-photon ionization techniques. The third target station will be used for the on-line "work-horses", i. e., plasma- and surface ionization sources.

It was pointed out earlier that isotopic- and isobaric beam purity are of paramount importance not only for experiments but also to avoid contamination of the post-acceleration sections. Among the major factors that affect beam purity are:

target matrix,
target temperature,
ionization selectivity,

ion source chemistry,
physical/chemical separation steps between target and ion source,
electric/magnetic mass analysis, and
stripping and molecular dissociation.

Analysis through a combination of electric and magnetic fields achieves the highest suppression of unwanted nuclei and for this reason the ISL is expected to incorporate a high- and low resolution separator. The high resolution separator should be capable of separating, for example, adjacent isobars in the A=100 region that have mass differences of $\geq$3MeV. This is a compromise between what is desirable and what is technically feasible. It is of course fortunate that the most exotic beams have the highest mass differences to their neighboring isobars.

3.3 Post-Acceleration

The post-acceleration of radioactive ions differs from the acceleration in conventional heavy ion facilities in that the conservation of intensity is of utmost importance. This requires several measures that are either irrelevant or not of major concern for stable beams. Delays between the production and acceleration of the radioactive species have to be minimized, *absolute* ionization efficiencies rather than the output currents of ion sources have to be maximized, transmissions through all ion-optical elements and accelerating structures have to approach 100%, stripping losses have to be avoided if possible, and beam emittances have to be small and stable.

The ISL post-acceleration concept shown in fig. 1 will meet most of these requirements. It is based mainly on RFQs and LINACs due to their excellent transmission, duty factors, and beam quality. The first RFQ (RFQ1) is intended to operate on a variable high voltage potential to adjust the input velocity of all singly charged ions to the equivalent of 2keV/u independent of mass. Its output energy is tentatively assumed to be 10KeV/u. For ions with charge-to-mass ratios $q/A \geq 0.1$ RFQ1 can be bypassed and the ions injected directly into RFQ2, which generates an output energy of 100keV/u. At this point stripping of ions with A>20 and q = 1 may be unavoidable. A drift-tube LINAC will subsequently accelerate the ions, to an energy of ~1.2MeV/u, which is the top energy for many astrophysical experiments (this could be raised to 2MeV/u). At this energy further beam purification can be achieved with a gas-filled separator, which would be used to obtain Z selection within a chain of isobars that, previously, has been separated by a conventional isotope separator. The basic idea is that the mean magnetic rigidity of an ion moving in a gas-filled magnetic field is given approximately by $B\rho = \text{const. } A\, Z^{-1/3}$. From this it follows that the relative change in bending radius is related to the relative difference in Z via $\delta\rho/\rho = -0.33\, \delta Z/Z$. It has to be investigated whether the unavoidable emittance deteriorations introduced by the gas and the windows can be tolerated.

A several fold gain in RNB intensity could be gained if stripping losses could be avoided by using the idea of a "charge state enforcer".[13] Figure 2

shows a possible realization discussed by Selph in ref. [5]. The ions are injected into a small storage ring and continuously encounter a stripper foil placed at a dispersion-free location, which gives rise to the characteristic charge-state distribution. In a dispersive section the desired charge state is extracted from the ring for further acceleration while the remaining ions are recirculated. Eventually all ions will be found in the desired charge state unless they are scattered out of the acceptance of the ring. The concept of a charge state enforcer could be used in the ISL at several stages of the acceleration process.

Subsequently, the ions are accelerated to an intermediate energy of ~6.5MeV/u for experiments near the Coulomb barrier and - after stripping - to the final energy of ~25MeV/u.

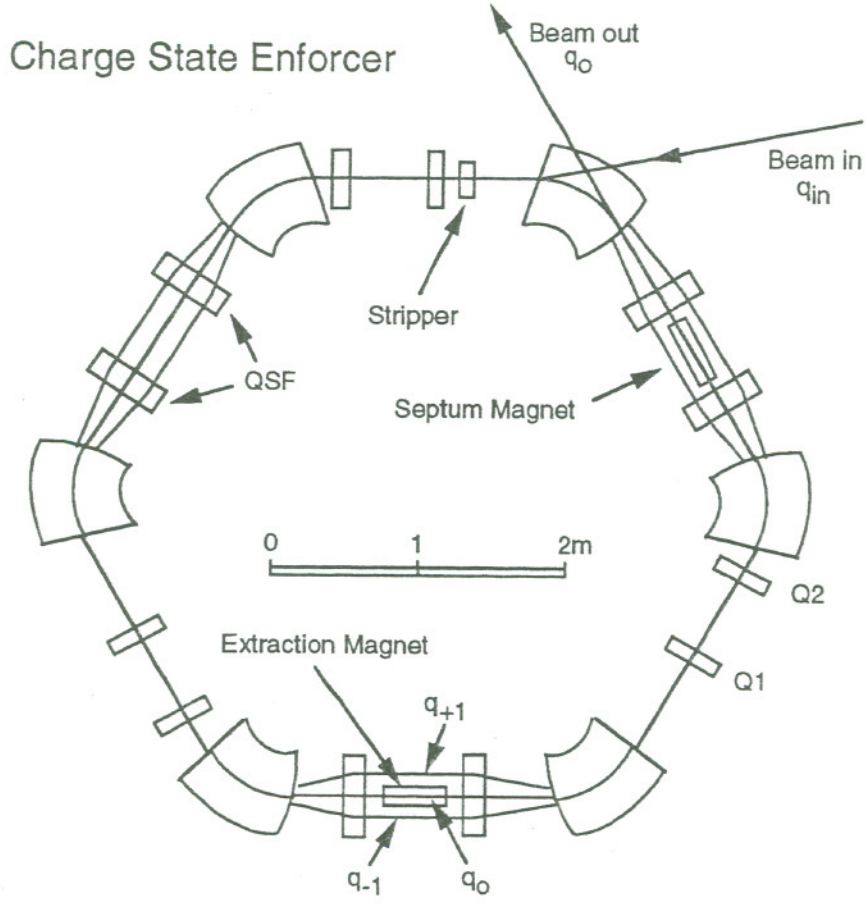

Fig. 2

4. RADIOLOGICAL ISSUES

In an era that is very sensitive to environmental concerns it is important to carefully evaluate the radiological issues associated with the ISL. These can be divided into four major categories: shielding against high energy (cascade) neutrons, induced activities, operational strategies for handling target/ion sources, and storage and disposal of radioactive waste.

The interaction of 500–1000MeV protons at currents of ≤200μA with targets of ~1mol/cm^2 for several days will produce dose rates on the order of 10^5 rad/h near the target. As an example, fig. 3 shows, as a function of time, the calculated dose rate at 1m, the activity, and the decay heat of a 1 mol/cm^2 ^{238}U target that has been irradiated for 1 week with 100μA of 600MeV protons. It is significant for storage and waste disposal considerations that after 6 months the dose rate diminishes by about three orders of magnitude. The ^{238}U target produces isotopes that are biologically active and are under strict regulatory control. They are in decreasing importance: ^{131}I, ^{125}I, ^{140}Ba, and ^{99}Mo.

The main contribution to the shielding requirements stems from intranuclear-cascade neutrons ($E_n \geq 20$MeV). For a 50 kW target the total shield attenuation needed for dose rates sufficiently low for occupation by experimenters and operators has been estimated at 10^{-9} in the forward direction and 10^{-8} in the lateral direction (Thorsen in ref. [5]). This requires a shielding thickness of several meters of steel and concrete.

Radiological concerns greatly influence the design of the front-end of the facility. All components that are in direct view of the target will become activated to such a degree that remote handling is mandatory. This affects, in particular, routine operations like the exchanges of targets, ion sources, and extraction electrodes. It also influences the choice of materials for the construction of mechanical and electrical components near the target. With few exceptions only metals , carbon, and ceramics will maintain their integrity. For radiation sensitive electronic components, motors, ECR sources, pumps, etc. intermediate shielding has to be provided.

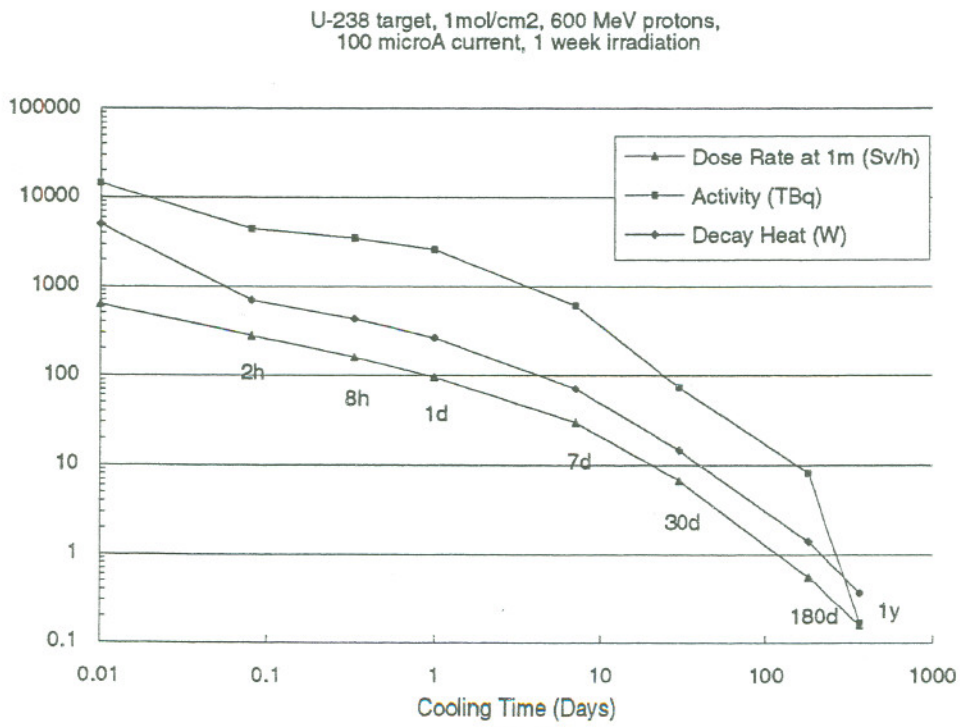

Fig. 3

5. EXPERIMENTS

Compared to conventional stable-heavy-ion accelerators the beam intensities at the ISL will be several orders of magnitude lower for beams that are far from β-stability. This has to be taken into account in the planning and execution of experiments. It will require close interaction between the accelerator operation and the experimenter to decide on the best trade-off between "exoticness" and intensity. Certain elements will be easier to produce as RNBs than others. During the start-up phase of the ISL, for example, alkalis, noble gases, and halogens will be easier to obtain with good intensities than refractory elements like Os, W, Hf, etc. Taking this into account in the choice of the beam/target combination can make a difference of many orders of magnitude in the event rate of an experiment.

Figure 4 shows an attempt at a rough correlation between several types of nuclear physics experiments - shown over a range of cross sections - and the RNB intensities needed for a given detector sensitivity, assuming a typical target thickness for heavy ion experiments of 10^{18} cm^{-2}. For example, if the detector is sensitive to a few counts per hour, brake-up reactions could be carried out with beams as low as $10^3 s^{-1}$, while rare multi-nucleon transfer reactions may require intensities of $10^9 s^{-1}$ or more. It is unfortunate that, in general, the most interesting beams - the ones that are furthest from stability - have the lowest intensities. This is illustrated on the right side of fig. 4, which shows the correlation between the distance from stability (expressed in positive or negative neutron numbers) and the expected beam intensities at the ISL (uncorrected for radioactive decay in the target and ion source). Because of the strong decline of the intensity with neutron number it is advisable that the ISL be designed for the highest RNB currents that are technologically feasible.

It is clearly impossible (and this author certainly does not have sufficient imagination) to discuss even a representative sample of all the experiments that will be carried out at the ISL. A more manageable approach is to look at some of the instrumentation that may be necessary or desirable to deal with the idiosyncrasies of RNB experiments.

As a general requirement, detector systems, spectrometers, and beam lines have to be protected from deposits of long-lived beams or beams with long-lived daughters. Typical collimator/target arrangements will have to be modified. A collimator or target holder that intercepts, for example, only 10^4 ions/s of a short-lived β^+-emitter will radiate, after a few half-lives, 2×10^4 511keV-photons/s into 4π. If the detection system is sensitive to this radiation the singles rates may become too high and/or useless data may be collected. In this connection, the microstructure of the RNB becomes important not only for time-of-flight measurements but also for background reduction. One of the requirements for protecting experimental equipment from the primary RNB is excellent beam quality from the post-accelerator as expressed in the emittances shown in the table above, another is that the beam be free of halos.

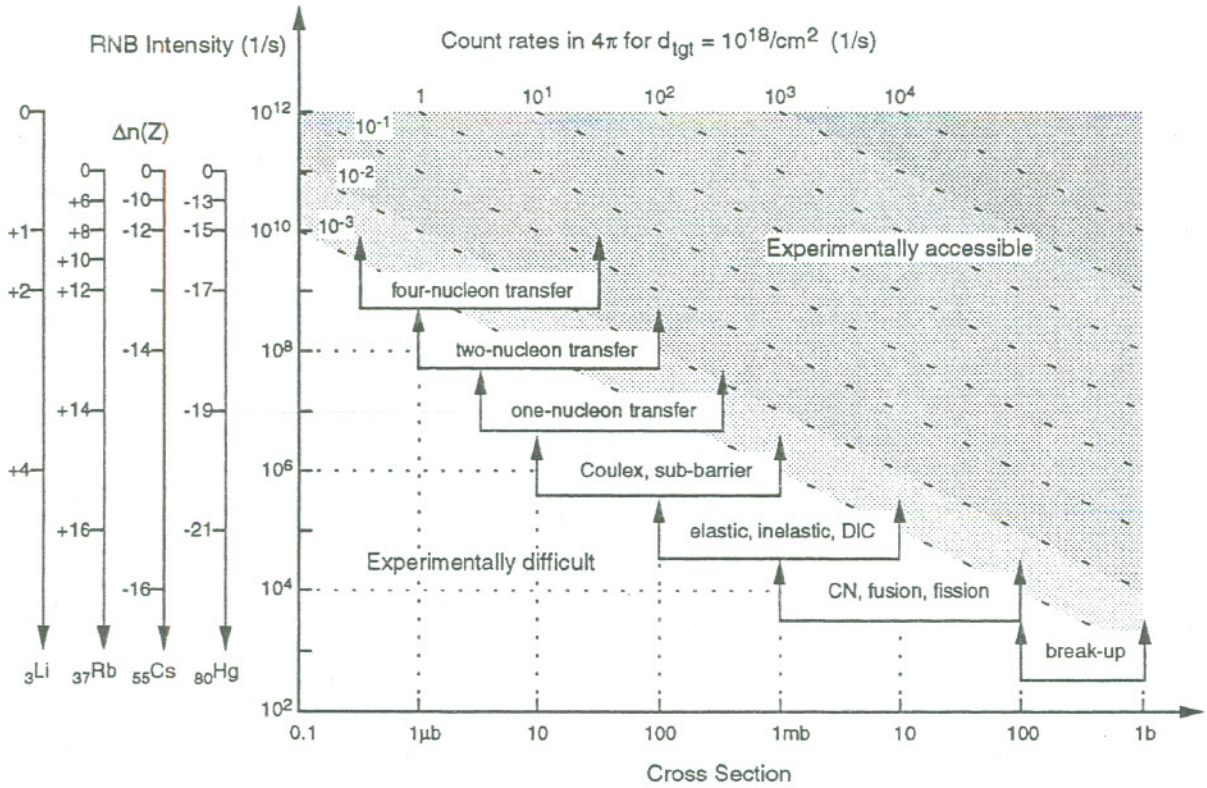

Fig. 4

Several specific instruments for the ISL are under discussion.[5] The cost for initial instrumentation will be a large fraction of the total cost of the facility.

Highly desirable is a 4π array for γ rays and charged particles, equipped with Si-microstrip detectors and, perhaps, a time projection chamber. This could be combined with a "neutron-wall."

Another important instrument is an E×B separator for fusion reactions, with large acceptance (~20msr), higher order corrections, and ray-tracing capability. One can imagine experiments where the 4π array, the neutron wall, and the spectrometer are combined.

For reactions carried out in inverse kinematics a high resolution ($R \sim 10^4$) magnetic spectrograph with large solid angle (~20msr) is needed. It should have large momentum acceptance ($\Delta p/p \approx 10\%$) and ray tracing capability.

To achieve large solid angles (500msr – 4π) for the collection of reaction products coaxial devices, like superconducting solenoids, are useful. They are very effective in separating the beam from weak reaction channels, their resolution, however, is poor.

Penning and Paul traps have become powerful devices for measuring nuclear and atomic properties even of single ions.[14] Conversely, large volume traps may in the future be able to store large numbers of ions, which would have many uses at RNB facilities (Moore in ref. [5]).

Ultimately it may be desirable to couple the ISL with a storage ring. This requires an effective bunching mechanism for injection to conserve average RNB intensity. The ring could be used for internal target experiments to

increase the luminosity over single pass experiments and to cool the circulating radioactive ions, as well as to accelerate them to higher energies. Electron cooling would improve beam quality by several orders of magnitude and would allow collinear experiments to study interactions between radioactive-, laser-, and electron beams. A storage ring would add considerably to the cost of the facility and may be considered a future option.

Astrophysicists would like to measure (n,γ) cross sections for many neutron-rich isotopes. At the ISL these isotopes would be collected on-line as radioactive targets (probably on a moving tape collector to avoid build-up of long-lived daughter products) and irradiated by a small neutron generator. A "stellar" neutron spectrum (kT$\approx$ 25keV) can be obtained from the reaction ^{7}Li(p,n)^{7}Be. At a proton energy of 1912keV and a proton current of 150 μA a kinematically collimated beam of 10^9 n/s can be generated.

It is anticipated that at the low-energy front end of the ISL ($E_{RNB} \leqq 100$keV) much of the type of instrumentation that is presently installed or being developed at ISOLDE/CERN will be used.

6. CONCLUSION

The advent of RNBs in this decade may rival in importance the development of heavy ion beams in the 1960s. The possibility of vastly expanding the exploration of the isospin degree of freedom will create exciting new vistas for nuclear- and astrophysics. The ISL will allow the investigation of new features in nuclear reactions, give access to special nuclear regions and states, create nuclei with new modes of excitations and deformations, explore exotic matter distributions at extreme N/Z ratios, and create new nuclei at the limits of stability of nuclear matter. In astrophysics it will be possible to simulate in the laboratory conditions under which stellar processes like supernovae, nucleosynthesis, and different burning scenarios proceed. RNBs may even help to shed light on the early history of the universe. For material science the flexible nature of RNBs is attractive because it is possible to choose freely for a given element the half-life, nuclear decay properties, spatial distributions, and densities.

However, as in many scientific endeavors, the most exciting discoveries will be those that cannot be foreseen.

It should be emphasized that this paper does not necessarily represent the consensus opinion of all the scientists involved in the ISL; it rather expresses in some aspects the personal opinions of this author. The planning for the ISL is a dynamic process in which the parameters of the facility and the scope of the experimental program are evolving continuously, supported by input from a large Users community.

*This work was performed under DOE contract DE-AC03-76SF00098.

7. REFERENCES

[1] *First International Conference on Radioactive Nuclear Beams,* Berkeley, 1989, edited by W. D. Meyer, J. M. Nitschke, and E. B. Norman (World Scientific, Singapore, 1990).

[2] *Workshop on the Science of Intense Radioactive Ion Beams,* Los Alamos, NM, 1990, edited by J. B. McClelland and D. J. Vieira, LA–11964–C.

[3] *Intl. Workshop on the Physics and Techniques of Secondary Nuclear Beams,* Dourdan, France, 1992, edited by J. F. Bruandet, B. Fernandez, and M. Bex (Edition Frontiers, Gif–sur–Ivette, France, 1992).

[4] *Second International Conference on Radioactive Nuclear Beams,* Louvain–la–Neuve, 1991, edited by T. Delbar (Adam Hilger, Bristol, 1991).

[5] *Workshop on the Production and Use of Intense Radioactive Beams at the IsoSpin Laboratory,* Oak Ridge, TN, 1992, edited by J. G. Garrett (ORNL), to be published.

[6] J. M. Nitschke, in *XIII Intl. Conf. on Cyclotrons and their Applications,* Vancouver, Canada, 1992, edited by G. Dutto and M. K. Craddock (World Scientific), pp. 713–720.

[7] *The IsoSpin Laboratory,* LALP 91–51 (1991).

[8] P. H. Stelson, Phys. Lett. **205B**, 190 (1988).

[9] W. v. Oertzen, in *Intl. Workshop on the Physics and Techniques of Secondary Nuclear Beams,* Dourdan, France, 1992, edited by J. F. Bruandet and B. Fernande (Edition Frontiers, Gif–sur–Ivette, France, 1992), pp. 142–153.

[10] J. P. Vary and M. A. Nagarajan, in *Prospects for Research with Radioactive Beams,* Washington, 1984, edited by J. M. Nitschke (LBL–18187), pp. 113–122.

[11] D. J. Clark, in *XIII Intl. Conf. on Cyclotrons and their Applications,* Vancouver, Canada, 1992, edited by G. Dutto and M. K. Craddock (World Scientific), pp. 721–724.

[12] H. J. Kluge, CERN 86–05 (1986).

[13] J. C. Cramer, Nucl. Instrum. & Methods **130**, 121–123 (1975).

[14] *Traps for Antimatter and Radioactive Nuclei,* Vancouver, 1992, edited by A. I. Yavin, to be published.