Submitted to Health Physics

LBL-342 c.2
Preprint

RESPONSE OF NTA PERSONNEL NEUTRON MONITORING FILM WORN ON HUMAN PHANTOM

Masao Oshino

September 1971

AEC Contract No. W-7405-eng-48

TWO-WEEK LOAN COPY

This is a Library Circulating Copy which may be borrowed for two weeks. For a personal retention copy, call Tech. Info. Division, Ext. 5545

LBL-342 c.2

DISCLAIMER

This document was prepared as an account of work sponsored by the United States Government. While this document is believed to contain correct information, neither the United States Government nor any agency thereof, nor the Regents of the University of California, nor any of their employees, makes any warranty, express or implied, or assumes any legal responsibility for the accuracy, completeness, or usefulness of any information, apparatus, product, or process disclosed, or represents that its use would not infringe privately owned rights. Reference herein to any specific commercial product, process, or service by its trade name, trademark, manufacturer, or otherwise, does not necessarily constitute or imply its endorsement, recommendation, or favoring by the United States Government or any agency thereof, or the Regents of the University of California. The views and opinions of authors expressed herein do not necessarily state or reflect those of the United States Government or any agency thereof or the Regents of the University of California.

RESPONSE OF NTA PERSONNEL NEUTRON MONITORING FILM WORN ON HUMAN PHANTOM

Masao Oshino

Lawrence Berkeley Laboratory
University of California
Berkeley, California 94720

September 1971

ABSTRACT

NTA films worn on a human phantom were exposed to several neutron sources (average energies ranged from 0.7 MeV to 4.4 MeV) and to stray neutrons of the Bevatron. Responses of NTA films were obtained in terms of proton track density per mrem, a convenient expression for dose equivalent evaluation in personnel neutron monitoring. The responses obtained were 3.9 t/cm^2 -mrem for ^{252}Cf fission neutrons, 9.2 t/cm^2- mrem for PuBe neutrons, and 11.9 t/cm^2-mrem for Bevatron neutrons.

Detectable limit of dose equivalent in personnel neutron monitoring with NTA films was statistically discussed. Consequently, it was found that the detectable limit of Bevatron neutrons is 150 mrem when scanning 25 microscopic fields if a statistical error of 20% is acceptable.

INTRODUCTION

As an application of nuclear track emulsions to the field of health physics, personnel neutron monitoring based on proton track counting in nuclear emulsions has been performed. The nuclear emulsions, which have been widely used for personnel neutron monitoring, are the special fine-grained films, Kodak Personnel Neutron Monitoring Film Type A (NTA). Several investigations of NTA film responses to fast neutrons have been reported.[1, 2]

However, in most practical cases of neutron monitoring, the neutrons to be measured are usually not monoenergetic but distributed in a wide energy range. Moreover, the direction of neutron incidence on the human body is not fixed; and during the exposure period, the human body has been acting as both a reflector and a shield on incident neutrons. Then, a question arises - "How can the exposure dose be evaluated from the proton track density observed in the NTA film worn on the human body?"

To answer the question, neutron exposures to NTA film packets on a human phantom and in free air were made using several kinds of neutron sources and Bevatron neutrons. Then, the relation between the dose equivalent exposure and the proton track density in the film was studied with various average energies of neutrons. In addition, the statistical error in proton track counting is discussed. Based on this discussion, the detectable limit of dose equivalent in personnel neutron monitoring with NTA films was determined.

EXPERIMENTAL PROCEDURE

Neutron sources

For the neutron exposure to NTA films, we used several neutron sources which emit neutrons of different average energies: ^{238}PuF, ^{252}Cf, ^{252}Cf with lead shield, ^{238}PuBe, and a combination of ^{252}Cf and ^{238}PuBe. Bevatron neutrons were also used as typical accelerator neutrons. The neutron sources used are listed in Table 1 with average neutron energies and neutron flux densities at 1 m. The neutron flux densities at 1 m from the sources ^{252}Cf and ^{238}PuBe were calculated from their source strengths. For the other sources, the neutron flux density was measured by a moderated BF_3 counter.* The average energy of neutrons emitted from the source was measured by the moderated BF_3 counter and a polyethylene lined proportional counter.** In the case of the exposure at the Bevatron, the neutron flux density did not remain constant during the exposure period; therefore, the neutron fluence exposure was measured instead of neutron flux density.

---

* BF_3 proportional counter utilizes a 6.3-cm-thick paraffin moderator, and has a flat response to neutrons of energies up to 20 MeV.

** This is a cylindrical proportional counter lined with 0.32 cm of polyethylene. The counter is filled with a mixture of 96% Ar and 4% CO_2 to a pressure of 1 atm. Sensitivity of the counter is essentially proportional to the energy flux density of neutrons. The counter will be called "PE counter" throughout this paper.

Phantom

An elliptical polyethylene cylinder filled with tissue-equivalent fluid was used as a human phantom. Dimensions of the cylinder are 20 cm × 36 cm in cross section, 60 cm in height, and 0.65 cm in wall thickness. The composition of the fluid was close to that of human tissue and is listed in Table 2.

Fast neutron exposure

Fast neutron exposure to NTA films was made in open air to reduce the fraction of scattered neutrons. The phantom and the neutron source were set up as shown in Fig. 1, and the phantom was rotated at 1 rpm. An NTA film packet worn on the surface of the phantom was exposed to the neutron source, which was fixed at 100 cm from the center of the phantom. By rotating the phantom, the exposure condition was made similar to that in practice. For comparison, neutron exposures to NTA film packets rotated or fixed in free air were also made in the same manner. To study the effect of the human body as a reflector or a shield of incident neutrons, NTA film packets worn on the fixed phantom were exposed to neutrons with several directions of incidence.

The exposure time was chosen so that the neutron fluence exposure was between 3×10^6 n/cm^2 and 10^8 n/cm^2. This assured that the proton track density in the film could be easily counted with a statistic error of less than 10%, or the tracks counted without the errors that might be caused by having too many tracks in the microscope field. In the case of the combination of ^{252}Cf and ^{238}PuBe, the exposure time for each source was chosen as the ratio of the neutron fluence given by ^{252}Cf to that given by ^{238}PuBe which would be 2(combination I) or 0.5 (combination II).

Neutron exposure at the Bevatron

The exposure of NTA films to accelerator neutrons was made in the stray neutron field outside the thick concrete shield of the Bevatron. Both NTA film packets -- on the rotating phantom and in free air -- were set up at 100 cm above the EPB roof shielding of the Bevatron. The moderated BF_3 counter and the PE counter were also set up at 50 cm from the film packets and the phantom. During the neutron exposure, all pulses from the counters were integrated. After the exposure, counts from the BF_3 counter were converted to neutron fluence; those from the PE counter were converted to energy fluence.

The methods of neutron measurement with a moderated BF_3 counter and a PE counter have been limited to neutron energies below 20 MeV. At high-energy accelerators, however, the contribution to dose equivalent by neutrons of energy greater than 20 MeV is substantial. In this experiment, therefore, an attempt was made to estimate the neutron fluence of energy greater than 20 MeV received by the NTA film packets during the exposure. The method used was the following: The flux density of stray neutrons of energy greater than 20 MeV was measured by carbon detectors* at the EPB roof of the Bevatron. At the same time, the flux density and the energy flux density of the neutrons of lower energy were measured by the moderated BF_3 counter and the PE counter, respectively. The ratios of the neutron density obtained by carbon detectors, $\phi(C)$, to that obtained by the BF_3 counter, $\phi(BF_3)$, are listed in Table 3 with average neutron energies $\bar{E}$. On the assumption that the relation between the average energy $\bar{E}$ and the ratio

*This is a 1720-gm plastic scintillator. Neutrons of energies greater than 20.4 MeV interact with ^{12}C nuclei in the plastic scintillator to produce ^{11}C by the (n, 2n) reaction. The plastic scintillator is used both for target material and for ^{11}C detecting medium.[3]

$r = \phi(C)/\phi(BF_3)$ remained as that shown in Table 3 during the long exposure period, the neutron fluence, $\Phi(C)$, of energies greater than 20 MeV was calculated for the NTA film from the following expression:

$$\Phi(C) = \Phi(BF_3) \times r(\bar{E}) \qquad (1)$$

where $\Phi(BF_3)$ is the neutron fluence obtained by the moderated BF_3 counter, and $r(\bar{E})$ is the ratio $\phi(C)/\phi(BF_3)$ corresponding to the average energy $\bar{E}$ obtained at the neutron exposure to the film. The value of $r(\bar{E})$ was obtained by interpolating the data listed in Table 3. The neutron fluence obtained by the BF_3 counter, $\Phi(BF_3)$, and the estimated neutron fluence, $\Phi(C)$, of energy greater than 20 MeV for Bevatron runs I and II are listed in Table 4.

Slow neutron exposure

In order to study the response of NTA films to slow neutrons, which produce energetic protons in the emulsion by the $^{14}N(n, p)^{14}C$ reaction, a slow neutron exposure in a concrete cave was made. The slow neutron flux in a cavity in concrete containing a fast neutron source is quite uniform throughout the cavity, and is used for the calibration of slow neutron detectors.[4] A concrete cube having a 60 cm $\times$ 60 cm $\times$ 60 cm cavity and 30-cm thick walls was used for the creation of the slow neutron field. An NTA film packet and the neutron source ^{238}PuBe were set up in the cavity as shown in Fig. 2. To reduce the incidence of primary fast neutrons on the film, a 5 cm diam. $\times$ 57 cm Lucite pipe filled with water was placed between the film and the source. The flux density of slow neutrons behind the water shielding was measured by the activation of indium foils with and without cadmium cover. The neutron flux density below the Cd cutoff energy (0.5 eV) was 3.05×10^3 n/cm^2-sec.

Both NTA film packets, with and without cadmium covers, were

exposed to the mixture of slow and fast neutrons with identical exposure times of 355 min. Subtracting the track density in the film covered with cadmium from that in the film exposed without cadmium cover, we obtained the track density in the film due to slow neutrons below the Cd cutoff energy.

Film processing and proton track counting

All the films exposed were stored in the air-conditioned low-background cave to prevent fading of the latent image. Within one week after each exposure, all exposed films were processed together with the control films, following the procedure established for personnel radiation monitoring films at LBL.*

After complete drying, each film was scanned under a microscope with a total magnification of 430 and a 245 μ × 245 μ field of view. Random scanning was used in track counting: a microscope field was selected at random by moving either the horizontal or vertical stage adjustments of the microscope, and proton tracks were observed. This procedure was continued until enough tracks had been counted to give a standard deviation less than 10%. All straight tracks greater than 5 μ, which is the range of an 0.48-MeV proton in emulsion, (5) were assumed to be proton tracks and were counted.

The results of the track counting were expressed as a track density (number of tracks per unit area of film), and the background track

* Developing 3.25 min. Kodak X-ray Developer solution (20° C)
Washing 2 min. water (20° C)
Fixing 10 min. Kodak X-ray Fixer bath (20° C)
Washing 40 min. water
Drying > 60 min. at room temperature

density obtained in the control films subtracted. Finally, the results were expressed in track density per mrem.

CONVERSION OF NEUTRON FLUENCE TO DOSE EQUIVALENT

In order to determine the response of NTA films in terms of track density per rem, the neutron fluence given to the film during the exposure period was converted to the corresponding dose equivalent in rem.

For monoenergetic neutrons of energy E, the dose equivalent rate DER(E) is expressed as

$$DER(E) = \phi(E)/g(E) , \qquad (2)$$

where $\phi(E)$ is the neutron flux density and g(E) is the flux to dose equivalent conversion factor. The conversion factor g(E) has been expressed analytically as a function of neutron energy,[6] and is shown in Table 5. For neutrons of wide spread energy distribution, the dose equivalent rate DER can be expressed by

$$DER = \phi / \bar{g}, \qquad (3)$$

where ϕ is the total neutron flux density and $\bar{g}$ is the average conversion factor; $\bar{g}$ is given by

$$\bar{g} = \int_{E_{min}}^{E_{max}} \phi(E) . dE \Big/ \int_{E_{min}}^{E_{max}} \phi(E)/_{g(E)} \cdot dE, \qquad (4)$$

where $\phi(E)dE$ is the energy distribution of the neutrons, and E_{max} and E_{min} are appropriate energy limits.

^{252}Cf fission neutron source

The energy distribution of fission neutrons from ^{252}Cf can be fitted with a Maxwellian distribution,[7] and is given by

$$\phi(E) = K\,E^{1/2} \exp\left(-\frac{E}{E_n}\right), \qquad (5)$$

where K is a constant, E is energy of neutrons, and E_n is the Maxwellian energy of the energy distribution and is equal to two-thirds of the average energy $\bar{E}$.

From equations (4) and (5), and the conversion factor given in Table 5, the average conversion factors for ^{252}Cf and ^{252}Cf with lead shield were calculated numerically.

^{238}PuBe and ^{238}PuF neutron sources

The conversion factor g(E) is constant (= 7.2 n/cm^2-sec/mrem/h) for neutron energies between 1 MeV and 10 MeV.[6] The energies of most neutrons emitted from ^{238}PuBe are distributed in this energy range. Therefore, the conversion factor of 7.2 n/cm^2-sec/mrem/h can be used for ^{238}PuBe neutrons without serious error. For neutrons of ^{238}PuF, the conversion factor $g(\bar{E})$ which corresponds to the average energy $\bar{E}$ of ^{238}PuF neutrons was used.

Bevatron neutrons

For neutrons with a broad energy distribution such as high-energy accelerator neutrons, the dose equivalent rate can be calculated from the neutron flux densities obtained by two or three kinds of detector. In the case ofa moderated BF_3 counter and a carbon detector, the dose equivalent rate DER is given by[6]

$$\text{DER (mrem/h)} = 1.13 \left[\frac{\phi(BF_3)}{8.0} + \frac{\phi(C)}{3.0}\right], \qquad (6)$$

where $\phi(BF_3)$ and $\phi(C)$ are the neutron flux densities in n/cm^2-sec. Integrating Eq. (6) over time, the dose equivalent DE is

$$DE(mrem) = 1.13 \left[\frac{\Phi(BF_3)}{2.88 \times 10^4} + \frac{\Phi(C)}{1.08 \times 10^4} \right], \qquad (7)$$

where $\Phi(BF_3)$ and $\Phi(C)$ are the neutron fluences in n/cm^2 to which the moderated BF_3 counter and the carbon counter are sensitive. From Eq. (7), the dose equivalent of the neutron exposure at the Bevatron was estimated. The average conversion factors used for the dose equivalent estimation in this experiment are listed in Table 6.

RESULTS

Dividing the number of observed tracks per microscope field by both the dose equivalent exposure and the area of the field (6.0×10^{-4} cm^2), we can express the response of NTA films in track density per unit dose equivalent (tracks/cm^2-mrem). This is a convenient expression for dose equivalent evaluation in personnel neutron monitoring with NTA films. Tables 7 through 10 show the responses obtained for various exposure conditions.

Comparison with Calculated Response

The response obtained for NTA films positioned both in free air (front-normal incidence) and on the phantom (phantom rotated) are plotted with average neutron energies in Fig. 3; the response of NTA films calculated by Lehman[1] is also shown. The response has been calculated for monoenergetic neutrons with front-normal incidence, and originally expressed in track units (tracks/cm^2 per 10^4 n/cm^2). For comparison with the experimental results, the calculated response is normalized in the unit of track density per mrem. Compared with the calculated response to monoenergetic neutrons (curve III) the experimental response to neutrons of broad energy distribution

(curve I) shows a quite low response in the energy range below 3 MeV, while it is close to curve III in the higher energy region. The reason for this is as follows: When film is exposed to neutrons with a broad energy distribution, only neutrons of energy greater than 0.5 MeV can contribute to the track density (track length > 5 μ) in the film; the other neutrons are wasted. On the other hand, regardless of whether their energies greater or lower than 0.5 MeV, all neutrons in the energy spectrum contribute to the dose equivalent. Therefore, the response to a broad spectrum (curve I) becomes lower than the response to monoenergetic neutrons (curve III) in the lower energy region where the undetectable fraction of neutrons is large. In the higher energy region, where the fraction is negligible, both curves show the same response.

Response of NTA Films Worn on the Phantom

The relation between the response of NTA films worn on the phantom and the direction of neutron incidence was obtained for ^{252}Cf and ^{238}PuBe neutrons. The relative responses (the response to front-normal incidence in free air normalized to unity) are plotted with incident angle in Fig. 4. In this case, the error in response due to the change in source-to-film distance with incident angle was corrected by the inverse square law. Figure 5 shows the response of films worn on the front and rear surfaces of the phantom (curves I and II); the response of films worn on the rotating phantom and in free air (film rotating) are also shown (curves III and IV). The differences in response of curves IV and I and curves IV and II are due to the effects of the phantom as a reflector and a shield (respectively) of the

incident neutrons. In the case of curve III, the exposure condition is similar to that of practical personnel monitoring, so that the response is considered to be close to the real response of NTA films in practical use. Comparing curve III with curve IV, we find that the ratio of the responses of NTA films with and without phantom is constant (0.7 ± 0.1) over the energy range examined (0.7 MeV to 4.4 MeV). For Bevatron neutrons, the ratio is 0.78 (Run I) and 0.66 (Run II).

Response to Slow Neutrons

The response of NTA films to slow neutrons below the Cd-cutoff energy is shown in Table 10. The response of 26.5 ± 5.4 tracks tracks/cm^2 mrem shows good agreement with Lehman's result of 0.29 track unit (= 24.2 tracks/cm^2 mrem).

STATISTICAL CONSIDERATION OF TRACK COUNTING

Statistical Error and Detectable Track Density

The number of proton tracks per unit area of a film fluctuates statistically with its location in the film. In addition, proton tracks produced by background radiations disturb the accurate determination of the proton track density produced by the neutrons to be measured. Thus the detectable density of proton tracks in the film is limited statistically by the number of microscope fields scanned and the background track density. In this study, we discuss the relation between the detectable limit of track density, background track density, and number of fields to be scanned.

Assuming that the net track density N has a standard deviation σ which does not exceed a certain fraction of the net track density kN, N is expressed as

$$N \geq \frac{1}{k} \sigma \quad . \tag{8}$$

In this discussion, the detectable limit of track density N_d with relative standard error k is defined to be the minimum value of N which satisfies Eq. (8), and is

$$N_d = \frac{1}{k} \sigma \cdot \tag{9}$$

According to the assumption that the distribution of track densities observed in the film is the Poisson distribution, the standard deviation of the net track density N_d is expressed as

$$\sigma = \left(\frac{N_k + N_b}{F} + \frac{N_b}{F_b} \right)^{1/2} , \tag{10}$$

where N_b is the background track density, and F and F_b are the numbers of fields scanned for the sample film and for the control film, respectively.

In routine track counting, the number of fields to be scanned per film is usually limited so that track counting for a large number of films will be completed within a given time, and is much smaller than that of the control film. Then, the standard deviation can be given by

$$\sigma \simeq \left(\frac{N_k + N_b}{F} \right)^{1/2} . \tag{11}$$

From Eqs. (9) and (11), N_d becomes

$$N_d \simeq \frac{1}{2k^2 F} \left[1 + \left(1 + 4 k^2 N_b \right)^{1/2} \right] . \tag{12}$$

From Eq. (12), it is obvious that the detectable limit of track density is a function of acceptable standard error k, number of fields to be scanned F, and background track density N_b.

The relations between N_d and F are calculated with various values of k and N_b, and the results are shown in Fig. 6. If the background track density is below 0.1 t/f and standard error of 20% is acceptable for the track counting, the detectable limit of track density is 1 t/f for 25 fields scanned.

Detectable Limit of Dose Equivalent

The detectable limit of dose equivalent DE_d with acceptable standard error k is defined to be the dose equivalent corresponding to the detectable limit of track density N_d, and is expressed as

$$DE_d \text{ (mrem)} = N_d(t/f) \times \frac{1}{S(cm^2/f)} \times \frac{1}{R(t/cm^2 \text{ mrem})}, \quad (13)$$

where S is the area of the microscope field, R is the response of NTA films worn on the phantom for isotropic exposure, and N_d is given by Eq. (12).

As shown in Figs. 3 and 5, the response of NTA films to fast neutrons varies with neutron energy. Therefore, it is difficult to discuss generally the detectable dose equivalent over the wide energy range. In this study, the detectable dose equivalent is discussed for special cases, i.e., fission neutrons from ^{252}Cf source and Bevatron neutrons.

For ^{252}Cf fission neutrons and Bevatron neutrons, the detectable limit of the dose equivalent is calculated using Eq. (13). In this calculation, the following values are used: R = 3.87 t/cm^2- mrem for ^{252}Cf fission neutrons, R = 11.9 t/cm^2- mrem (average of Run I and Run II) for Bevatron neutrons, N_b = 0.05 t/f, and S = 6.0×10^{-4} cm^2/f. Figure 7 shows the detectable limit of the dose equivalent as a function

of acceptable standard error. In personnel neutron monitoring, if 25 fields are scanned and a statistical error of 20% is acceptable, the dose equivalents of 150 mrem for Bevatron neutrons and of 450 mrem for fission neutrons of ^{252}Cf are detectable.

SUMMARY

Response of NTA film packets were examined for (1) neutrons from (α, n) neutron sources of ^{238}PuF and ^{238}PuBe, (2) fission neutrons of ^{252}Cf, (3) stray neutrons of Bevatron, and (4) slow neutrons below the Cd-cutoff energy. By rotating a human phantom on which an NTA film packet was worn, we have simulated the exposure situation found in practical neutron monitoring with NTA films. All responses obtained were expressed in units of proton track density per mrem. The results are summarized as follows:

(1) For average energy below 3 MeV, the response to neutrons of broad energy distribution is quite low compared with that of mono-energetic neutrons.

(2) In the case of isotropic exposure, the response of NTA films worn on the phantom was 3.9 t/cm^2-mrem for ^{252}Cf fission neutrons, of 9.2 t/cm^2-mrem for ^{238}PuBe neutrons, and 11.9 t/cm^2- mrem for Bevatron neutrons. For slow neutrons below the Cd-cutoff energy, the response (without phantom) was 26.5 t/cm^2- mrem.

(3) In the case of an isotropic exposure, the response of NTA films worn on the phantom was slightly low compared with the response obtained in free air, and the ratio of these responses was nearly constant (= 0.7 ± 0.1) over the energy range examined.

The relation between statistical error, number of microscope fields scanned, and detectable limit of proton track density was discussed; and the detectable limit of track density was expressed by a simple function of acceptable standard error, number of fields to be scanned, and background track density. Based on the detectable limit of track density and the measured response of NTA films, the detectable

limit of dose equivalent in personnel neutron monitoring with NTA films was estimated for both Bevatron neutrons and fission neutrons.

ACKNOWLEDGMENTS

The author wishes to thank Mr. H. Wade Patterson and Dr. Ralph H. Thomas for their suggestions, which have made this work possible. The author thanks the members of the Health Physics Department, Lawrence Berkeley Laboratory for their kind help; Mr. Alvin J. Miller for arrangement of neutron exposure at the Bevatron, Mr. Joseph B. McCaslin for neutron flux measurements at the Bevatron, Miss Josephine Camp and Miss Dorothy Hadley for their kind help in film processing and microscopic work. The author especially thanks Mr. Lloyd D. Stephens for his continuous support and encouragement. Finally, the author wishes to express his appreciation to those individuals at both the Lawrence Berkeley Laboratory and the Japan Atomic Energy Research Institute for making this exchange visit possible. This work was done under the auspices of the U. S. Atomic Energy Commission.

REFERENCES

1. R. L. Lehman, Energy Response and Physical Properties of NTA Personnel Neutron Dosimeter Film, Lawrence Radiation Laboratory Report UCRL-9513, 1961.
2. E. Piesch, Some Remarks on Fast Neutron Dosimetry with Nuclear Track Film, in Personnel Dosimetry Techniques for External Radiation. ENEA Symposium, Madrid, 1963.
3. J. B. McCaslin, High Energy Neutron Detector, Health Physics 2, 399 (1960).
4. H. W. Patterson and R. Wallace, A Method of Calibrating Slow-Neutron Detectors, Lawrence Radiation Laboratory Report UCRL-8359, 1958.
5. W. H. Barkas, Nuclear Research Emulsions (Adademic Press New York, 1963).
6. W. S. Gilbert et al., 1966 CERN-LRL-RHEL Shielding Experiment at the CERN Proton Synchrotron, Lawrence Radiation Laboratory Report UCRL-17941, 1968.
7. International Commission on Radiation Units and Measurements, ICRU Report 13, (1969).

Table 1. Neutron sources

Neutron source	Average neutron energy (1) (MeV)	Neutron flux density at 1 m (n/cm^2 - sec)
^{238}PuF #651	0.7	3.15×10 (2)
^{252}Cf #92570 with 15 cm lead shield	1.0	1.03×10^3 (2)
^{252}Cf #92570 with 5 cm lead shield	1.4	1.73×10^3 (2)
^{252}Cf #92570	1.8	1.88×10^3 (3)
Combination of ^{252}Cf and ^{238}PuBe I	2.7	2.46×10^3 (3)
Combination of ^{252}Cf and ^{238}PuBe II	3.5	2.46×10^3 (3)
^{238}PuBe #632	4.4	6.47×10^2 (3)
Bevatron neutron I	3.3	———
Bevatron neutron II	4.2	———

(1) Average neutron energies were measured by PE and BF_3 counters calibrated with PuBe # 582.

(2) Obtained by the moderated BF_3 counter.

(3) Calculated from the source strength.

Table 2. Composition of tissue equivalent fluid

Chemicals	Formula	Weight (kg)
Glycerol	$CH_2OHCHOHCH_2OH$	8.52
Urea	NH_2CONH_2	2.27
Sucrose	$C_{12}H_{22}O_{11}$	2.13
Sodium chloride	NaCl	0.04
Distilled water	H_2O	17.04
Total		30.00

Table 3. Neutron flux densities $\phi(C)$ and $\phi(BF_3)$ at the EPB roof shielding of the Bevatron.

Average energy (1) (MeV)	$\phi(BF_3)$ (2) (n/cm^2 - sec)	$\phi(C)$ (3) (n/cm^2-sec)	$r = \frac{\phi(C)}{\phi(BF_3)}$
5.9	4.17×10^2	5.50×10^2	1.32
3.7	1.68×10^2	1.16×10^2	0.69
2.4	1.76×10^2	6.64×10	0.37
1.8	1.53×10^2	4.26×10	0.18

(1) Average neutron energies obtained by PE and BF_3 counters. These energies are not true average energies of Bevatron neutrons because of the low sensitivity of both counters to neutrons of energy greater than 20 MeV.

(2) Neutron flux density obtained by the moderated BF_3 counter.

(3) Neutron flux density obtained by carbon detectors.

Table 4. Neutron fluence given to NTA films during the exposure at the Bevatron.

Run	Average energy (1) (MeV)	$\Phi(BF_3)$(2) (n/cm^2)	$\Phi(C)$ (3) (n/cm^2)
I	3.3	1.18×10^7	7.07×10^6
II	4.2	7.32×10^6	6.22×10^6

(1) Obtained by PE and moderated BF_3 counters.

(2) Neutron fluence obtained by the moderated BF_3 counter.

(3) Estimated neutron fluence of energy greater than 20 MeV.

Table 5. Analytic expressions of conversion factor g(E)[6]

Energy range (MeV)	Conversion factor g(E) $\frac{n/cm^2 - sec}{mrem/h}$
$< 10^{-2}$	232
$10^{-2} - 10^{0}$	$7.20\ E^{-3/4}$
$10^{0} - 10^{1}$	7.20
$> 10^{1}$	$12.8\ E^{-1/4}$

Table 6. Average conversion factors

Neutron Source		Average neutron energy $\bar{E}$ (MeV)	Average conversion factor $\bar{g}$ $\frac{n/cm^2\text{-}sec}{mrem/h}$	$\frac{n/cm^2}{mrem}$
Concrete cave + ^{238}PuBe		slow neutron*	232	8.35×10^5
^{238}Puf		0.7	9.4	8.38×10^4
^{252}Cf + 15 cm Pb		1.0	9.8	3.53×10^4
^{252}Cf + 5 cm Pb		1.4	8.8	3.17×10^4
^{252}Cf		1.8	8.2	2.95×10^4
^{252}Cf + ^{238}PuBe	I	2.7	7.8	2.82×10^4
^{252}Cf + ^{238}PuBe	II	3.5	7.5	2.70×10^4
^{238}PuBe		4.4	7.2	2.59×10^4
Bevatron	I	3.3	DE(mrem) =	
Bevatron	II	4.2	$1.13\left[\frac{\Phi(BF_3)}{2.88 \times 10^4} + \frac{\Phi(C)}{1.08 \times 10^4}\right]$	

* Neutrons below the Cd cutoff energy (0.5 eV)

Table 7. The response of NTA films worn on the phantom, isotropic exposure (phantom rotated).

Neutron source	Average energy (MeV)	Neutron fluence (n/cm^2)	Dose equivalent (mrem)	Tracks / Field	Net track density (t/f)	Track density per DE (t/cm^2 mrem)
^{238}PuF	0.7	2.36×10^7	6.98×10^2	292/200	1.43	3.40 ± 0.22
^{252}Cf + 15 cm Pb	1.0	5.36×10^7	1.52×10^3	252/100	2.49	2.73 ± 0.19
^{252}Cf + 5 cm Pb	1.4	2.49×10^7	7.86×10^2	238/150	1.55	3.30 ± 0.22
^{252}Cf	1.8	1.13×10^7	3.83×10^2	187/200	0.89	3.87 ± 0.30
^{252}Cf + $^{238}PuBe$ I	2.7	1.39×10^7	4.94×10^2	304/200	1.46	4.92 ± 0.30
^{252}Cf + $^{238}PuBe$ II	3.5	7.07×10^6	2.61×10^2	255/200	1.22	7.77 ± 0.30
$^{238}PuBe$	4.4	3.88×10^6	1.50×10^2	263/300	0.83	9.23 ± 0.62
Bevatron I	3.3	1.18×10^7 * 0.71×10^7 **	1.20×10^3	352/40	8.70	12.1 ± 0.7
Bevatron II	4.2	7.32×10^6 * 6.22×10^6 **	9.38×10^2	333/50	6.56	11.7 ± 0.7

* $\Phi(BF_3)$

** Φ (C)

Table 8. The response of NTA films fixed in free air, front normal exposure.

Neutron source	Average energy (MeV)	Neutron fluence (n/cm^2)	Dose equivalent (mrem)	Tracks Fields	Net track density (t/f)	Track density per DE (t/cm^2 mrem)
^{238}PuF	0.7	2.36×10^7	6.98×10^2	195/100	1.92	4.57 ± 0.35
^{252}Cf + 15 cm Pb	1.0	2.45×10^7	6.93×10^2	206/100	2.03	4.87 ± 0.36
^{252}Cf + 5 cm Pb	1.4	2.49×10^7	7.86×10^2	260/100	2.57	5.45 ± 0.33
^{252}Cf	1.8	1.67×10^7	5.67×10^2	380/200	1.85	5.45 ± 0.28
^{252}Cf + $^{238}PuBe$ I	2.7	2.09×10^7	7.41×10^2	769/200	3.79	8.53 ± 0.34
^{252}Cf + $^{238}PuBe$ II	3.5	1.04×10^7	3.87×10^2	272/100	2.69	11.6 ± 0.7
$^{238}PuBe$	4.4	5.75×10^6	2.22×10^2	466/250	1.82	13.7 ± 0.7
Bevatron I	3.3	1.18×10^7* 0.71×10^7**	1.20×10^3	368/40	9.10	12.6 ± 0.7
Bevatron II	4.2	7.32×10^6* 6.22 ± 10^6**	9.38×10^2	385/50	7.60	13.5 ± 0.7

* $\Phi(BF_3)$

** Φ (C)

Table 9. The response of NTA film in free air, isotropic exposure (film rotated)

Neutron source	Average energy (MeV)	Neutron fluence (n/cm^2)	Dose equivalent (mrem)	Tracks / Field	Net track density (t/f)	Track density per DE (t/cm^2 mrem)
^{238}PuF	0.7	2.36×10^7	6.98×10^2	$^{213}/_{100}$	2.10	5.00 ± 0.37
^{252}Cf + 15 cm Pb	1.0	2.45×10^7	6.93×10^2	$^{191}/_{100}$	1.88	4.51 ± 0.33
^{252}Cf + 5 cmPb	1.4	2.49×10^7	7.86×10^2	$^{281}/_{120}$	2.31	4.90 ± 0.30
^{252}Cf	1.8	1.35×10^7	4.59×10^2	$^{280}/_{200}$	1.35	4.92 ± 0.30
$^{252}Cf + ^{238}PuBe$ I	2.7	2.09×10^7	7.41×10^2	$^{358}/_{100}$	3.52	7.92 ± 0.43
$^{252}Cf + ^{238}PuBe$ II	3.5	1.04×10^7	3.87×10^2	$^{259}/_{120}$	2.13	9.15 ± 0.57
$^{238}PuBe$	4.4	4.66×10^6	1.80×10^2	$^{290}/_{200}$	1.40	13.0 ± 0.80
Bevatron I	3.3	1.18×10^7* 0.71×10^7**	1.20×10^3	$^{225}/_{20}$	11.2	15.5 ± 1.0
Bevatron II	4.2	7.32×10^6* 6.22×10^6**	9.38×10^2	$^{504}/_{50}$	9.98	17.7 ± 0.8

* $\Phi(BF_3)$

** $\Phi(C)$

Table 10. Response of NTA films to slow neutrons

NTA film packet	Tracks field*	Track density (t/f)	Track density due to slow neutrons (t/f)	Slow neutron fluence (n/cm^2)	Dose equivalent (mrem)	Track density per DE (t/cm^2-mrem)
without Cd	1349/200	6.75	1.24	6.51×10^7	77.9	26.5 ± 5.4
with Cd	1102/200	5.51				

* The microscope field is $6.0 \times 10^{-4} cm^2$

FIGURE CAPTIONS

Fig. 1 Arrangement of human phantom and neutron source.

Fig. 2 Slow neutron exposure in the cavity of concrete cube.

Fig. 3 Response of NTA film as a function of average neutron energy.

Fig. 4 Response of NTA film worn on human phantom versus direction of neutron incidence.

Fig. 5 Response of NTA film worn on human phantom (front-normal, back-normal, and isotropic exposure).

Fig. 6 Detectable limit of track density as a function of number of microscope fields scanned.

Fig. 7 Detectable limit of dose equivalent as a function of acceptable statistical error.

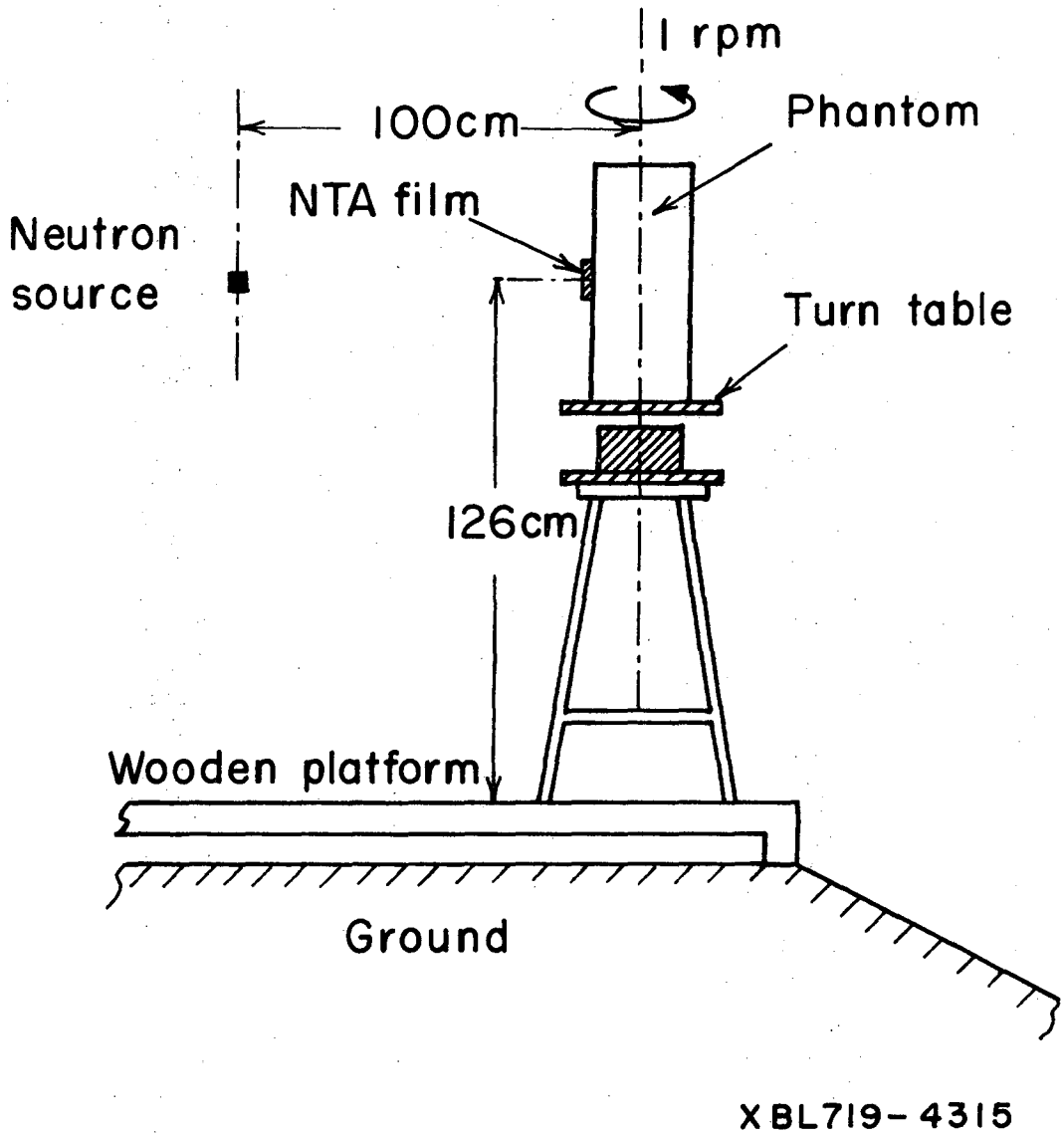
1 rpm
100cm
Phantom
NTA film
Neutron source
Turn table
126cm
Wooden platform
Ground
XBL719-4315

Fig. 1

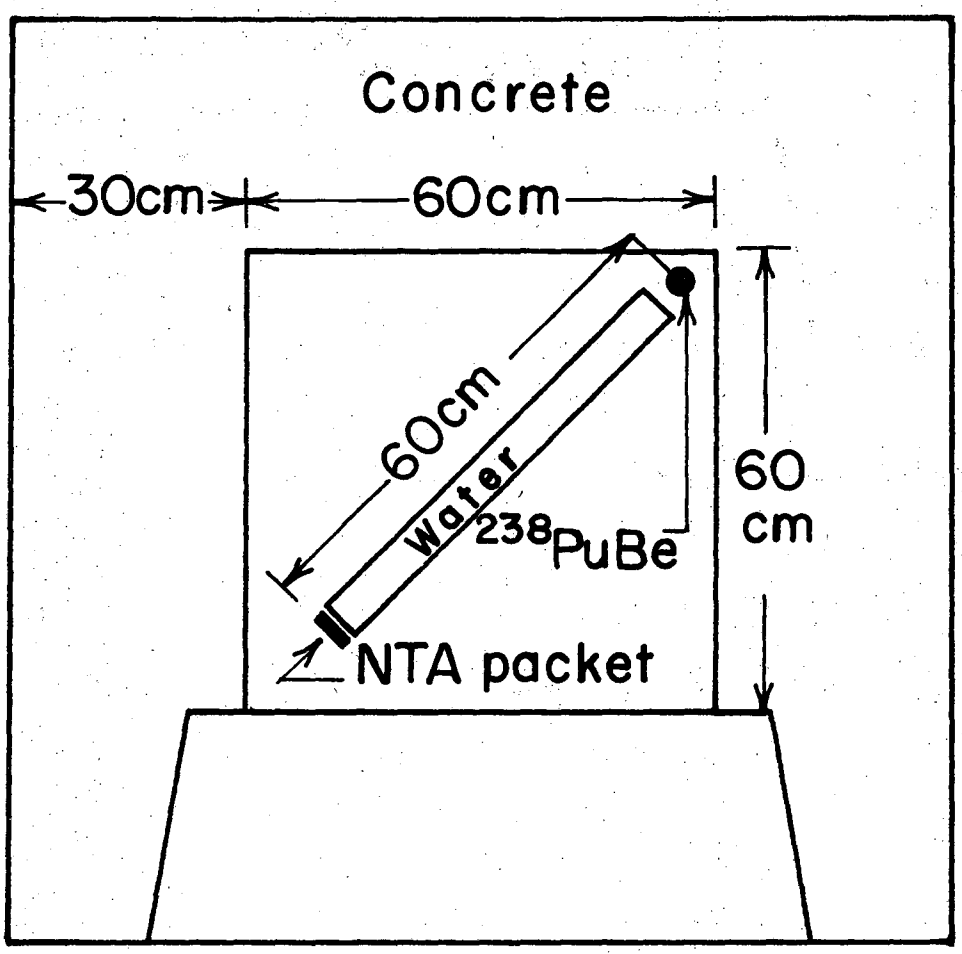

XBL719-4316

Fig. 2

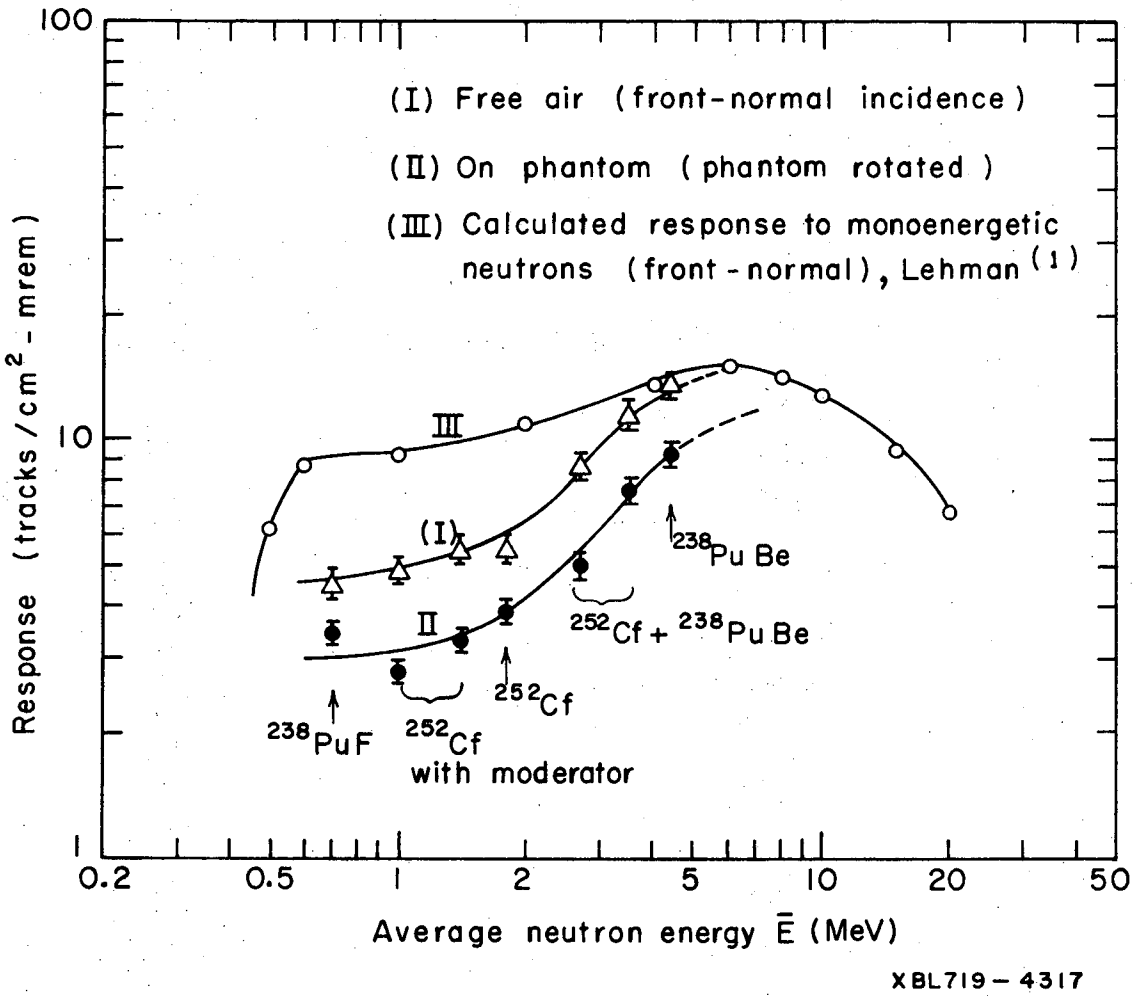
(I) Free air (front-normal incidence)
(II) On phantom (phantom rotated)
(III) Calculated response to monoenergetic neutrons (front-normal), Lehman (1)
Response (tracks/cm² - mrem)
Average neutron energy Ē (MeV)
238PuF
252Cf with moderator
252Cf
252Cf + 238PuBe
238PuBe
XBL719-4317

Fig. 3

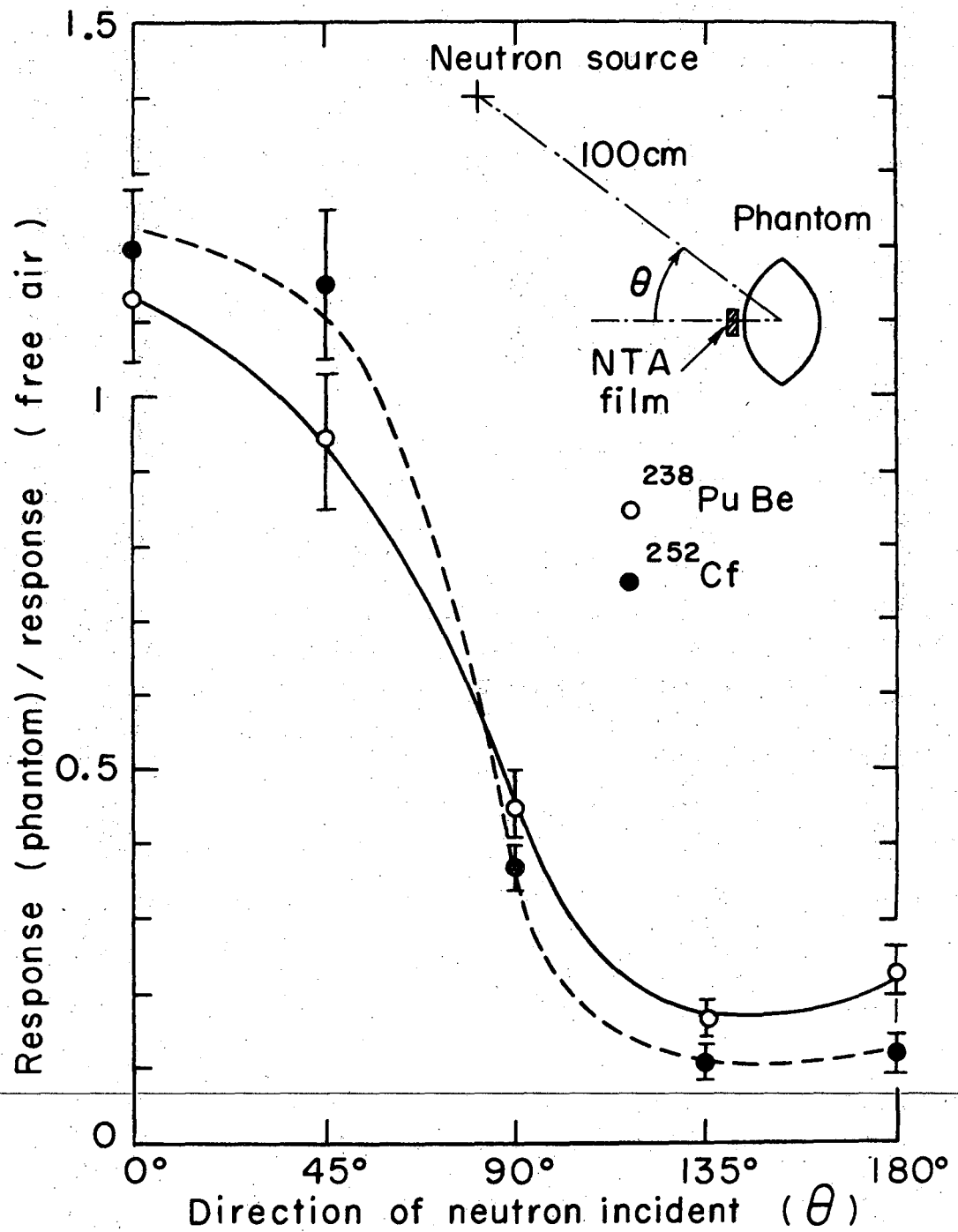

XBL719-4318

Fig. 4

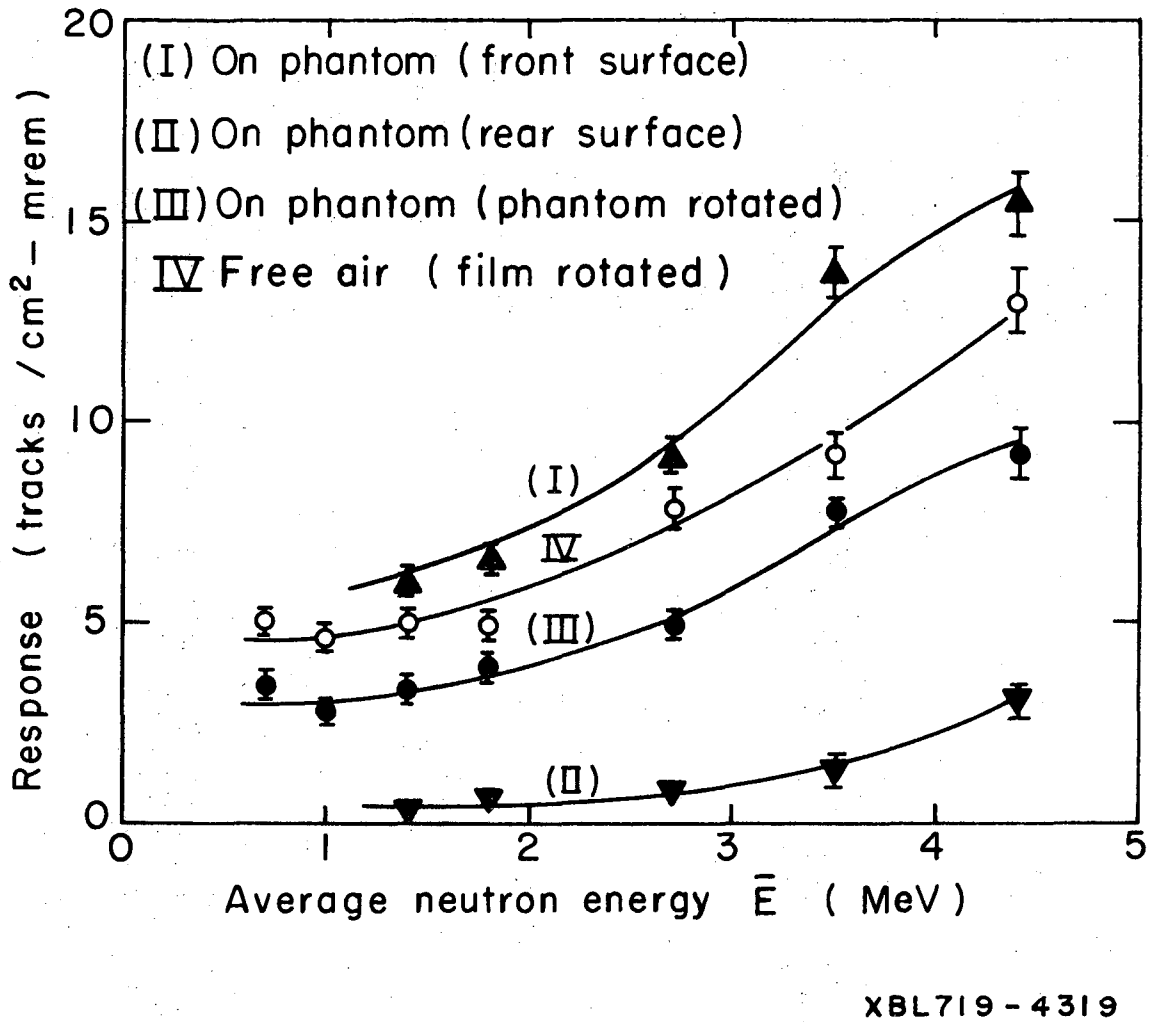
(I) On phantom (front surface)
(II) On phantom (rear surface)
(III) On phantom (phantom rotated)
IV Free air (film rotated)
(I)
IV
(III)
(II)
Response (tracks / cm² – mrem)
Average neutron energy Ē (MeV)
0
5
10
15
20
0
1
2
3
4
5
XBL719-4319

Fig. 5

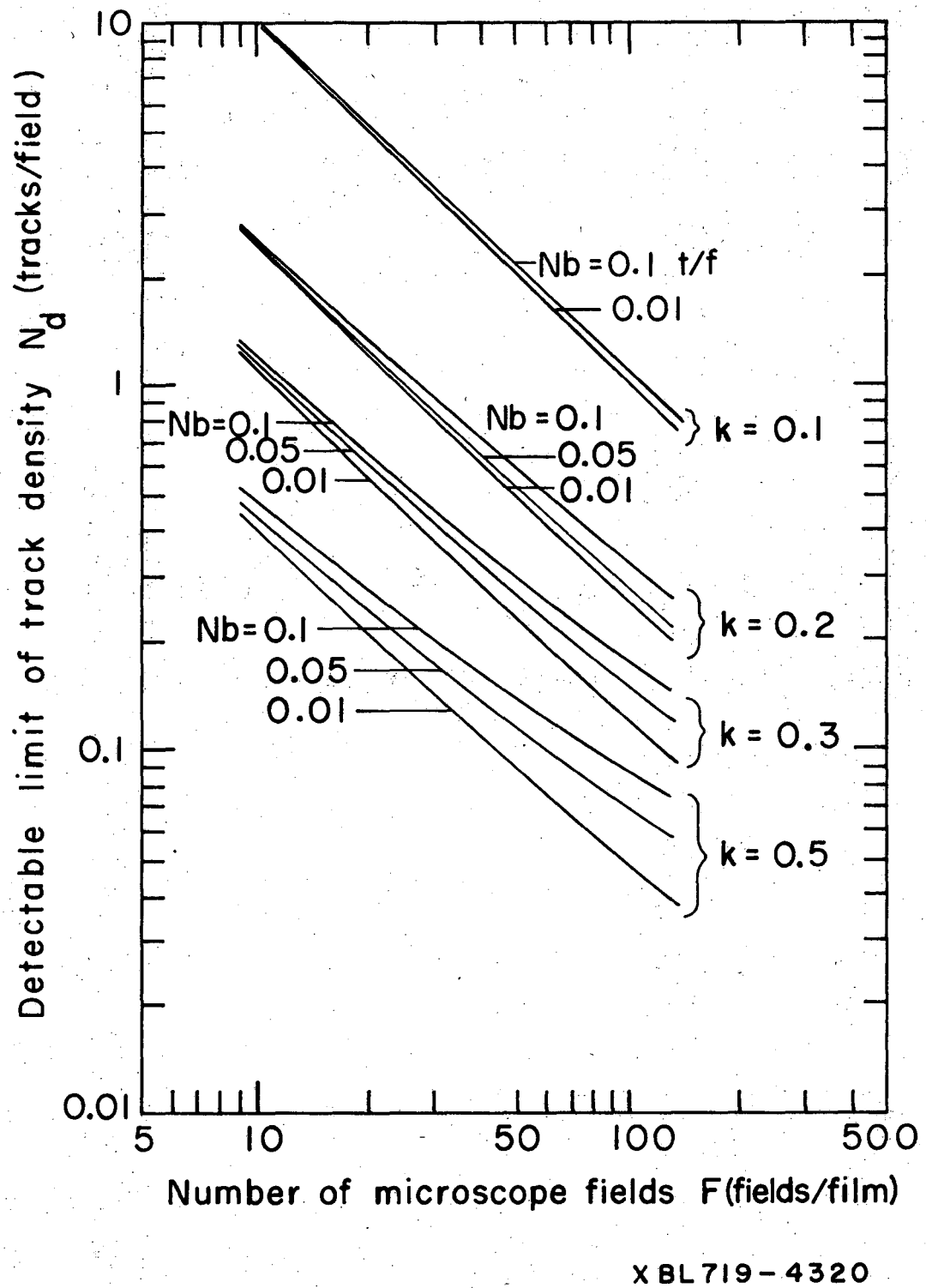

XBL719-4320

Fig. 6

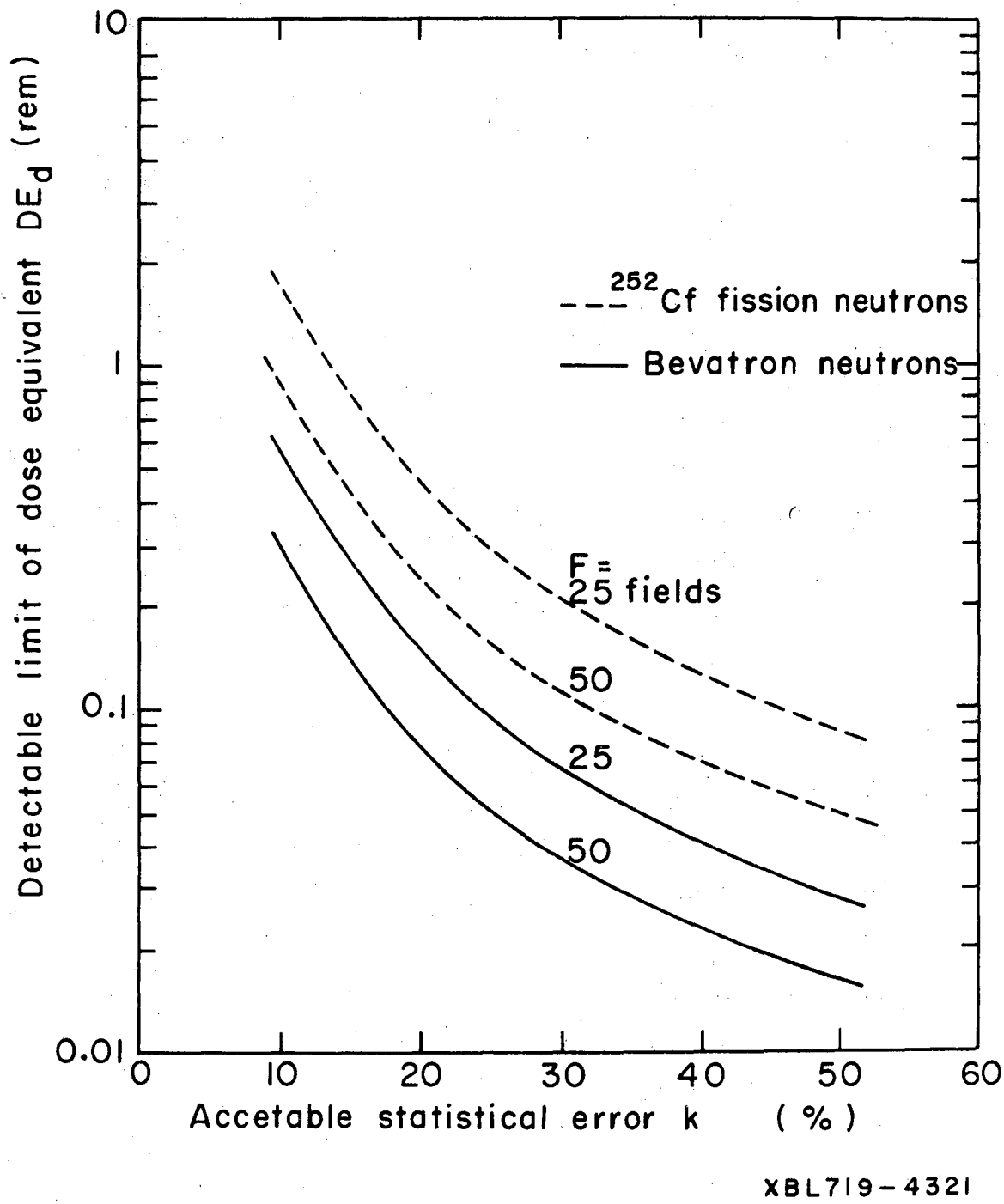
10
1
0.1
0.01
Detectable limit of dose equivalent DE$_d$ (rem)
0
10
20
30
40
50
60
Accetable statistical error k (%)
^{252}Cf fission neutrons
Bevatron neutrons
F =
25 fields
50
25
50
XBL719-4321

Fig. 7

LEGAL NOTICE

This report was prepared as an account of work sponsored by the United States Government. Neither the United States nor the United States Atomic Energy Commission, nor any of their employees, nor any of their contractors, subcontractors, or their employees, makes any warranty, express or implied, or assumes any legal liability or responsibility for the accuracy, completeness or usefulness of any information, apparatus, product or process disclosed, or represents that its use would not infringe privately owned rights.

TECHNICAL INFORMATION DIVISION
LAWRENCE BERKELEY LABORATORY
UNIVERSITY OF CALIFORNIA
BERKELEY, CALIFORNIA 94720