LBL-34726
UC-414

Lawrence Berkeley Laboratory
UNIVERSITY OF CALIFORNIA

Presented at the Tenth International Conference on Ultra-Relativistic Nucleus-Nucleus Collisions, Borlange, Sweden, June 20–24, 1993, and to be published in the Proceedings

The STAR Experiment at the Relativistic Heavy Ion Collider

J.W. Harris and The STAR Collaboration

September 1993

REFERENCE COPY
Does Not
Circulate
Bldg. 50 Library.
LBL-34726
Copy 1

Prepared for the U.S. Department of Energy under Contract Number DE-AC03-76SF00098

DISCLAIMER

This document was prepared as an account of work sponsored by the United States Government. While this document is believed to contain correct information, neither the United States Government nor any agency thereof, nor the Regents of the University of California, nor any of their employees, makes any warranty, express or implied, or assumes any legal responsibility for the accuracy, completeness, or usefulness of any information, apparatus, product, or process disclosed, or represents that its use would not infringe privately owned rights. Reference herein to any specific commercial product, process, or service by its trade name, trademark, manufacturer, or otherwise, does not necessarily constitute or imply its endorsement, recommendation, or favoring by the United States Government or any agency thereof, or the Regents of the University of California. The views and opinions of authors expressed herein do not necessarily state or reflect those of the United States Government or any agency thereof or the Regents of the University of California.

LBL-34726
UC-414

To be published in the Proceedings of the
Tenth International Conference on Ultra-Relativistic Nucleus-Nucleus
Collisions (Quark Matter '93), Borlange, Sweden, June 20-24, 1993,
Nuclear Physics A

The STAR Experiment at the Relativistic Heavy Ion Collider

J. W. Harris
Lawrence Berkeley Laboratory
University of California, Berkeley, CA 94720

and

The STAR Collaboration

September 1993

This work was supported by the Director, Office of Energy Research, Division of Nuclear Physics
of the Office of High Energy and Nuclear Physics of the U.S. Department of Energy under
Contract DE-AC03-76SF00098

The STAR Experiment at the Relativistic Heavy Ion Collider

J.W. Harris

Nuclear Science Division, Lawrence Berkeley Laboratory,
1 Cylotron Road, Berkeley, CA 94720, U.S.A.

STAR Collaboration
D.L. Adams[22], N. Added[23], S. Ahmad[22], S.A. Akimenko[20], B.D. Anderson[12], G.T. Anderson[2], R.M. Anjos[23], A. Aprahamian[18], Yu.I. Arestov[20], E. Atkin[16], A. Baldwin[12], V. Baublis[16], M.E. Beddo[1], N.I. Belikov[20], R. Bellwied[29], V.I. Belousov[20], S. Bennett[29], J. Bercovitz[13], I. Bertram[22], J. Bielecki[29], F. Bieser[13], N.N. Biswas[18], M.A. Bloomer[13], B.E. Bonner[22], F.P. Brady[6], W.J. Braithwaite[2], L. Braun[13], J.A. Buchanan[22], N. Carlin[23], J.B. Carroll[7], D.A. Cebra[6], A.D. Chacon[24], C.S. Chan[17], K.-S. Chan[25], S.I. Chase[13], M.G. Cherney[9], R.K. Choudhury[24], W. Christie[11], B.V. Chujko[20], J.M. Clement[22], M.D. Corcoran[22], T.M. Cormier[29], J.G. Cramer[28], H.J. Crawford[5], A.M. Davidenko[20], J.W. Dawson[1], R. Debbe[4], A.A. Derevschikov[20], P.A. DeYoung[8], W. Dominik[26], L. Dou[29], J.E. Draper[6], I. Duck[22], W.R. Edwards[13], S.E. Eiseman[4], J.M. Engelage[5], S.V. Erin[20], A. Etkin[4], D. Ferenc[10], I. Flores[5], K.J. Foley[4], Z. Fraenkel[30], A. French[29], E. Friedlander[13], D. Fritz[13], U. Garg[18], M. Gazdzicki[10], V. Ghazikhanian[7], G. Glass[25], W. Gong[13], O.A. Grachov[20], J. Grebiezkow[26], D. Greiner[13], L. C.Greiner[5], E. Grimson[14], D.P. Grosnick[1], V. Grushin[16], V.J. Guarino[1], W.N. Haberichter[1], R.W. Hackenburg[4], J. Hall[29], T.J. Hallman[7], J.W. Harris[13], W.E. Hearn[13], D.A. Hill[1], N. Hill[1], A.S. Hirsch[21], E. Hjort[21], G.W. Hoffmann[25], H. Huang[21], T.J. Humanic[19], G.J. Igo[7], P.M. Jacobs[13], R. Jayanti[19], P.G. Jones[13], E. Judd[14], M.L. Justice[12], K. Kadija[3], M. Kaplan[8], P.J. Karol[8], T. Kasprzyk[1], D. Keane[12], V.P. Kenney[18], A. Khodinov[16], S.A. Kleinfelder[13], A.S. Konstantinov[20], D. Kostin[16], I. Kotov[20], V. Kozlov[16], M.A. Kramer[17], V. Kuryatkov[16], R.L. LaPierre[13], B. Lasiuk[7], A. Lebedev[16], M.J. LeVine[4], Q. Li[29], S.J. Lindenbaum[17], V. Lindenstruth[13], P.J. Lindstrom[13], A. Ljubicic, Jr.[3], W.J. Llope[15], R.S. Longacre[4], D.X. Lopiano[1], W.A. Love[4], L. Madansky[11], S. Margetis[13], J. Marx[13], H.S. Matis[13], Yu.A. Matulenko[20], C.P. McParland[13], T.S. McShane[9], A.P. Meschanin[20], Z. Milosevich[8], N. Miphtakhov[16], K. Mirk[13], J. Mitchell[13], J.L. Mitchell[6], C.F. Moore[25], S. Mordechai[25], R. Morse[13], J. Murgatroyd[29], G.S. Mutchler[22], A.I. Mysnick[20], J. Nasiatka[1], C.J. Naudet[13], A. Nazarov[16], V. Nevolin[16], T.L. Noggle[13], S. Novikov[16], S.B. Nurushev[20], G. Odyniec[13], C. Ogilvie[14], D.L. Olson[13], A. Oltchak[16], E. Onishenko[16], E. Paganis[25], G. Paic[3], A.I. Pavlinov[20], T. Pawlak[27], W. Peryt[27], E. Petereit[1], E.D. Platner[4], J. Pluta[27], A.Yu. Polyarush[20], N.T. Porile[21], A.M. Poskanzer[13], D. Prindle[28], T. Prokofyeva[16], C. Pruneau[29], G. Rai[13], J. Rasson[13], R.L. Ray[25], D. Read[25], R.E. Renfordt[10], P.J. Riley[25], H.-G. Ritter[13], J.B. Roberts[22], D. Roehrich[10], G. Roger[29], A.A. Rollefson[2], J.L. Romero[6], A.I. Ronzhin[20], V.L. Rykov[20], I. Sakrejda[13], A.C. Saulys[4], J.J. Schambach[13], R.P. Scharenberg[21], L.S. Schroeder[13], J.E. Seger[9], V.A. Sergeev[20], D. Seymour[28], A. Shalnov[16], Y.P. Shao[12], J. Sheen[29], K.E. Shestermanov[20], D. Shuman[13], A. Simakov[16],

L.F. Soloviev[20], H.M. Spinka[1], B.K. Srivastava[21], R. Stock[10], R. Stone[13], M. Strikhanov[16], B. Stringfellow[21], H. Stroebele[10], A.T. Sustich[2], T.J.M. Symons[13], E.M. Szanto[23], A. Szanto de Toledo[23], Yu. Sytsko[16], J.-L. Tang[25], S. Tarakanov[16], M.L. Tincknell[21], M. Toy[7], T.A. Trainor[28], S. Trentalange[7], O.D. Tsay[20], I. Tserruya[30], A.G. Ufimtsev[20], D.G. Underwood[1], A. Vander Molen[15], A. Vanyashin[16], A.N. Vasiliev[20], G. Vilkelis[19], Yu. Volkov[16], S. Voloshin[16], D. Vranic[3], H.J. Ward[25], J.W. Watson[12], R.C. Welsh[11], S. Wenig[10], G. Westfall[15], J. Whitfield[8], C.A. Whitten, Jr.[7], H. Wieman[13], K. Wilson[13], D.C. Wold[2], K.L. Wolf[24], P. Yepes[22], A. Yokosawa[1], W. Zhang[12], K.H. Zhao[17], X.-Z. Zhu[28], Y. Zhu[17], V.E. Zyrin[16]

[1] Argonne National Lab, USA [2] U. Arkansas, Little Rock, USA [3] Rudjer Boskovic Institute, Croatia [4] Brookhaven National Lab, USA [5] U. California at Berkeley, Space Sciences Lab, USA [6] U. California at Davis, USA [7] U. California at Los Angeles, USA [8] Carnegie Mellon U., USA [9] Creighton U., USA [10] U. Frankfurt, Germany [11] Johns Hopkins U., USA [12] Kent State U., USA [13] Lawrence Berkeley Lab [14] Massachusetts Institute of Technology, USA [15] Michigan State U., USA [16] Moscow Engineering Physics Institute, Russia [17] City College of New York, USA [18] U. Notre Dame, USA [19] Ohio State U., USA [20] Institute of High Energy Physics, Protvino, Russia [21] Purdue U., USA [22] Rice U., USA [23] U. Sao Paulo, Brazil [24] Texas A & M U., USA [25] U. Texas, Austin, USA [26] Warsaw U., Poland [27] Warsaw U. of Technology, Poland [28] U. Washington, USA [29] Wayne State U., USA [30] Weizmann Institute of Science, Israel

1. INTRODUCTION

The primary motivation for studying nucleus-nucleus collisions at relativistic energies is to investigate partonic, hadronic and nuclear matter at high energy densities ($\varepsilon > 1\text{-}2$ GeV/fm^3). Early speculations of possible exotic states of matter focused on the *astrophysical implications* of abnormal states of dense nuclear matter.[1] Subsequent field theoretical calculations, assuming chiral symmetry in the σ model, resulted in predictions of abnormal nuclear states and excitation of the vacuum.[2] This generated an interest in *particle and nuclear physics* to transform the state of the vacuum by using relativistic nucleus-nucleus collisions.[3] Shortly thereafter, a phase transition to a system of deconfined quarks and gluons, the Quark-Gluon Plasma (QGP),[4] was predicted. This had implications for both *early cosmology and stellar evolution.* Many theoretical developments have since brought us to the present, still infant state of understanding[5] of the behavior of highly excited partonic, hadronic and nuclear matter in relativistic nucleus-nucleus collisions.

The early dynamics of these collisions involving hard parton-parton interactions can be calculated using perturbative QCD.[6] Various theoretical approaches result in predictions that highly excited ($T_{effective} \sim 500$ MeV), predominantly gluonic matter will be formed within the first 0.3 fm/c of the collision process.[7] QCD lattice calculations[8] exhibit a phase transition between a QGP at a temperature near 250 MeV and hadronic matter. Such phases of matter may have existed shortly after the Big Bang and may exist in the cores of dense stars. An important question is whether such states of matter can be created and studied in the laboratory. The Relativistic Heavy Ion Collider (RHIC) is

being constructed at Brookhaven National Laboratory to investigate these new and fundamental properties of matter.

2. THE STAR EXPERIMENT

The STAR experiment[9] will concentrate on measurements of hadron production over a large solid angle to be able to study observables on an event-by-event basis. STAR will search for signatures of QGP formation and investigate the behavior of strongly interacting matter at high energy density. Since there is no single definitive signature for the QGP, it is essential to use a flexible detection system at RHIC. STAR will simultaneously measure many experimental observables to study signatures of the phase transition and the space-time evolution of the collision process. This requires an understanding of the microscopic structure of hadronic interactions, at the level of quarks and gluons, at high energy densities. The experiment will utilize two aspects of hadron production that are fundamentally new at RHIC: correlations between *global observables on an event-by-event basis* and the use of *hard scattering of partons* as a probe of the properties of high density nuclear matter.

The event-by-event measurement of global observables - such as temperature, flavor composition, collision geometry, reaction dynamics, and energy or entropy density fluctuations - is possible because of the very high charged particle densities, $dn_{ch}/d\eta \approx 1000$ expected in nucleus-nucleus collisions at RHIC. This will allow novel determination of the thermodynamic properties of single events. Correlations between observables made on an event-by-event basis may isolate potentially interesting events.

Measurable jet yields at RHIC will allow investigations of hard QCD processes via both highly segmented calorimetry and high p_t single particle measurements in a tracking system. A systematic study of particle and jet production will be carried out over a range of colliding nuclei from pp through p-nucleus up to Au-Au, over a range of impact parameters from peripheral to central, and over the range of energies available at RHIC. The pp interactions will help establish the gluon structure functions, the p-nucleus interactions will be used to study the nuclear gluon distributions and thus the extent of shadowing of gluons in the nucleus, while the nucleus-nucleus interactions are essential to determine the degree of quenching of hard scattered partons in the surrounding nuclear, hadronic, and partonic matter. Measurements of the remnants of hard-scattered partons will be used as a penetrating probe of the QGP, and will provide new information on the nucleon structure function and parton shadowing in nuclei.

Measurements will be made at midrapidity over a large pseudo-rapidity range ($|\eta| < 1$) with full azimuthal coverage ($\Delta\phi = 2\pi$) and azimuthal symmetry. The detection system is shown in Fig. 1. It will consist of a silicon vertex tracker (SVT) and time projection chamber (TPC) inside a solenoidal magnet with 0.5 T uniform field for tracking and momentum analysis over $|\eta| < 2$, and particle identification via dE/dx at low p_t; a time-of-flight system surrounding the TPC for particle identification at high momenta; electromagnetic calorimetry just inside the solenoid to trigger on and measure jets and the transverse energy of events; and external time projection chambers (not shown in Fig. 1) located downstream outside the solenoid to extend the tracking coverage to $|\eta|$ 4.5. Additional fast trigger detectors will be installed to trigger on collision geometry and the position of the primary interaction vertex.

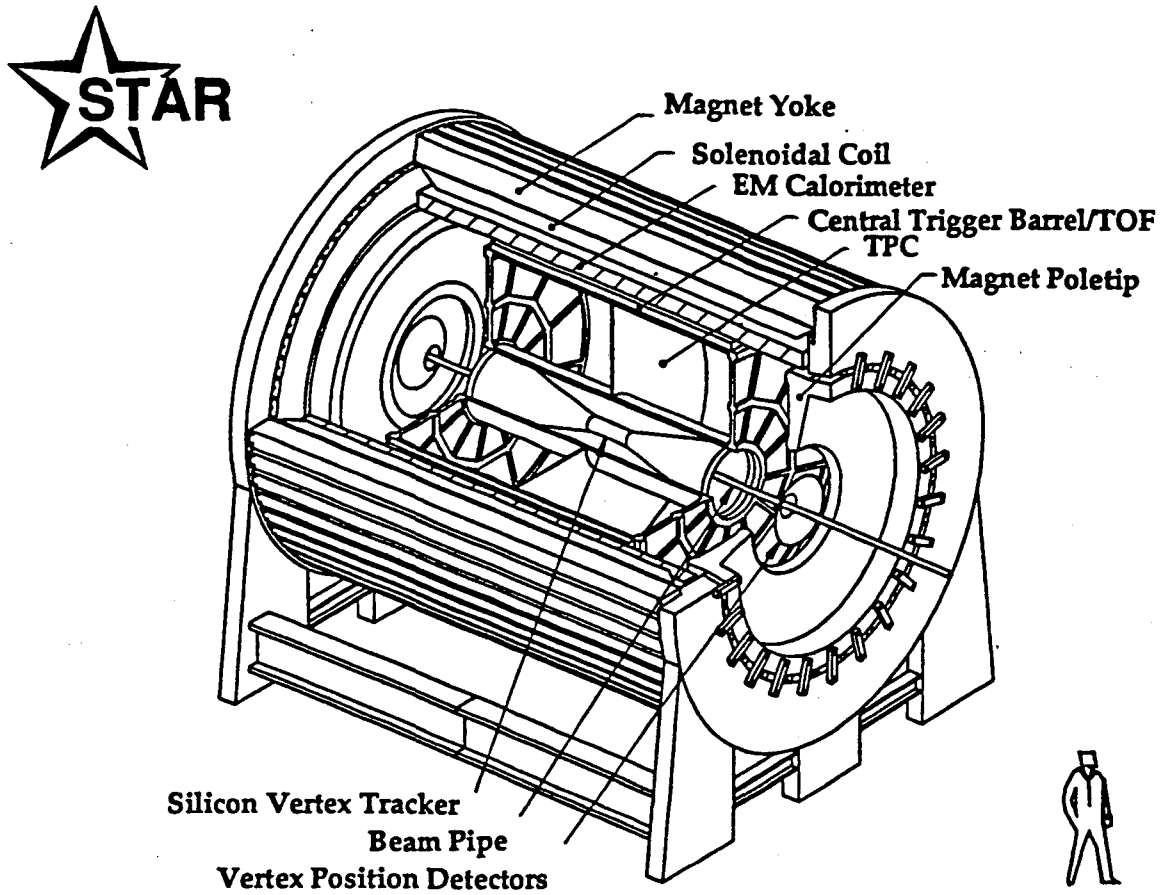

Figure 1. Schematic layout of the Solenoidal Tracker At RHIC.

3. PHYSICS OF STAR

3.1 Parton Physics from Jets, Mini-Jets and High p_t Particles

The early stages of the collision process can be studied by measuring the products of QCD hard scattering processes. The partons in a single hard scattering, whose products are observed near midrapidity, must traverse distances of several fermi through highly excited matter in a nucleus-nucleus collision. The energy loss of these propagating quarks and gluons is predicted[10] to be sensitive to the medium and may be a direct method of observing the excitation of the medium. Passage through hadronic or nuclear matter is predicted to result in an attenuation of the jet energy and broadening of jets. Relative to this damped case, a QGP is predicted to be transparent and an enhanced yield at a given transverse energy is expected. The yield of jets will be measured as a function of the transverse energy of the jet.

Mini-jets are expected to be produced copiously in collisions at RHIC.[11,12] Similar to the case for high p_t jets, the observed yield of mini-jets is expected to be influenced strongly by the state of the high density medium through which they propagate. It is important to study the degree of fluctuation of the transverse energy and multiplicity as a function of rapidity and azimuthal angle ($d^2E_t/dyd\phi$ and $d^2n/dyd\phi$) *event-by-event*, which should be strongly affected by the presence of mini-jets.[13].

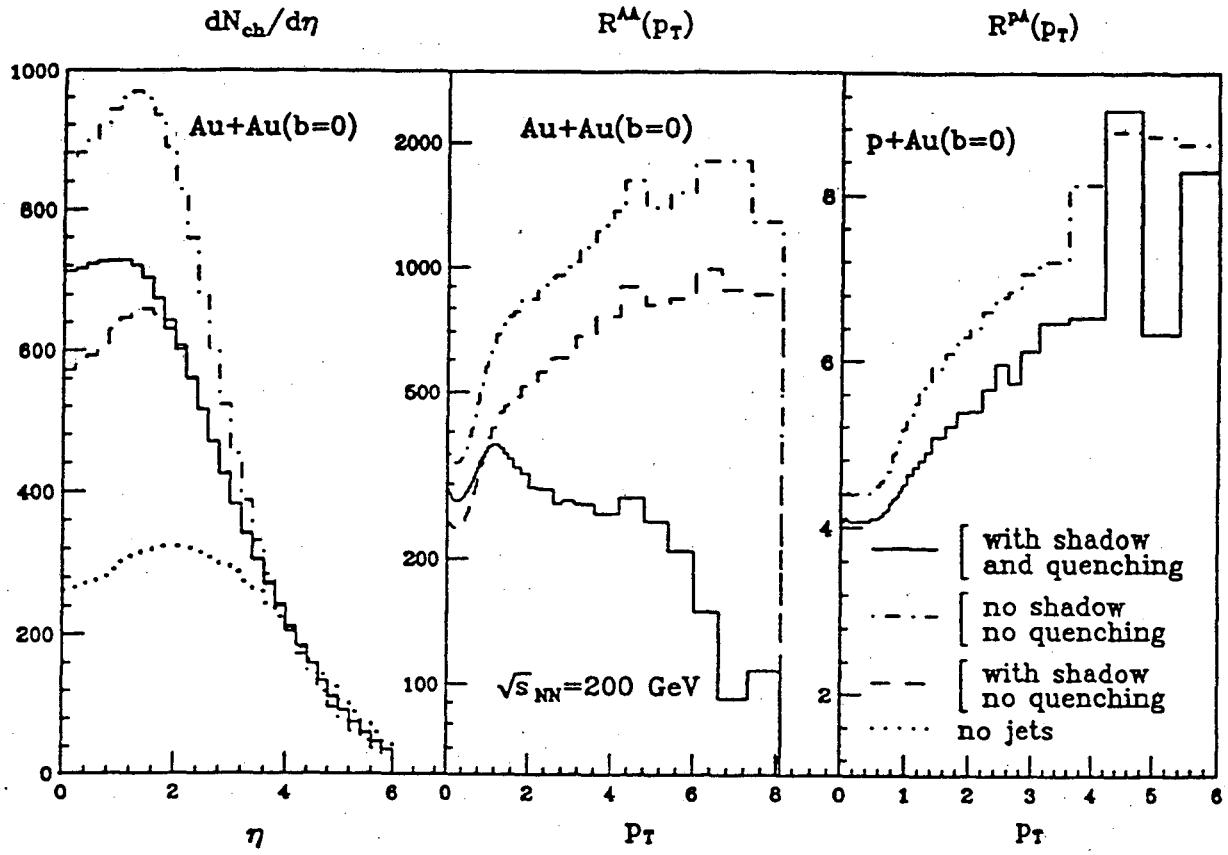

Figure 2. Results from HIJING calculations for central Au+Au and p+Au interactions at RHIC. The dependence of the inclusive charged hadron spectra on mini-jet production (dash-dotted), gluon shadowing (dashed) and jet quenching (solid) assuming that the gluon shadowing is identical to that of quarks. $R^{AB}(p_t)$ is the ratio of the inclusive p_t distribution of charged hadrons in A+B nuclear interactions to that of p+p (see Ref. 14).

The *inclusive* p_t distributions and rapidity distributions of hadrons will also be influenced by jets, mini-jets, gluon shadowing and quenching[14] as can be seen in Fig. 2. A systematic study of pp, p-nucleus and nucleus-nucleus collisions will be necessary to unravel the degree to which shadowing and quenching contribute to the spectra of particles in nucleus-nucleus collisions. The expected rates for measuring various hard-scattering processes in STAR are given in Table 1.

3.2 Particle Spectra

As a consequence of the high multiplicities in central nucleus-nucleus events, the slope of the transverse momentum (p_t) distribution for pions and the $\langle p_t \rangle$ for pions and kaons can be determined *event-by-event*. Thus, individual events can be characterized by a pion slope parameter T_0 (effective "temperature") or $\langle p_t \rangle$, and a kaon $\langle p_t \rangle$ in order to search for events with extremely high temperature, predicted[15] to result from deflagration of a QGP. The accuracy of measuring $\langle p_t \rangle$ per event as a function of the

Table 1
Rates for hard QCD processes expected in STAR.

Observable	$\sqrt{s_{nn}}$ (GeV)	Colliding System	Luminosity $\mathcal{L}$ ($cm^{-2}s^{-1}$)	p_t Range (GeV/c)	STAR Rate (#/10^7s)
jets, (inclusive)	200	pp	5×10^{30}	> 20	2.3×10^6
				> 40	4.2×10^3
$\lvert\eta\rvert$<0.5		p Au	3.2×10^{28}	> 20	2.8×10^6
		(min. bias)		> 40	5.0×10^3
		Au Au	2×10^{26}	> 20	5.5×10^5
		(central)		> 40	1.0×10^3
	500	pp	1.4×10^{31}	> 20	1.1×10^8
				> 40	2.5×10^6
				> 60	1.3×10^5
^{o}, $^+$, or $^-$	200	pp	5×10^{30}	10 .5	4.8×10^4
(inclusive)				15 .5	1.5×10^3
$\lvert\eta\rvert$<1		p Au	3.2×10^{28}	10 .5	5.8×10^4
		(min. bias)		15 .5	1.8×10^3
		Au Au	2×10^{26}	10 .5	1.2×10^4
		(central)		15 .5	~350
	500	pp	1.4×10^{31}	10 .5	4×10^6
				20 .5	3×10^4
				35 .5	$\sim 1.2 \times 10^3$

charged particles measured per event is displayed in Fig. 3a. The determination of $\langle p_t \rangle$ for pions can be made very accurately on the single event basis in this experiment, over the expected range of multiplicities in central collisions from Ca + Ca to Au + Au. For kaons, with ~ 200 charged kaons per event in the acceptance for central Au + Au events, $\langle p_t \rangle$ can be determined accurately for single events.

Inclusive p_t distributions of charged particles will be measured with high statistics to investigate effects such as collective radial flow and critical temperature at low p_t, and mini-jet attenuation[16] at high p_t. The p_t spectra of baryons and anti-baryons at midrapidity are particularly interesting for determining the stopping power of quarks. Measurements of the net baryon number and net charge are important for establishing the baryo-chemical potential $\mu_B(y)$ at midrapidity.

3.3 Strangeness Production

One of the first predictions of a signature for the formation of a QGP was the enhancement in the production of strange particles resulting from chemical equilibrium of a system of quarks and gluons[17]. A measurement of the K/π ratio provides information on the relative concentration of strange and nonstrange quarks, i.e. $\langle (s + \bar{s})/(u + \bar{u} + d + \bar{d}) \rangle$. This has been suggested[18] as a diagnostic tool to differentiate between a hadronic gas and a QGP, and to study the role of the expansion velocity. The K/π ratio will be measured in STAR *event-by-event* with sufficient accuracy (see Fig. 3b) to classify the events for correlations with other event observables.

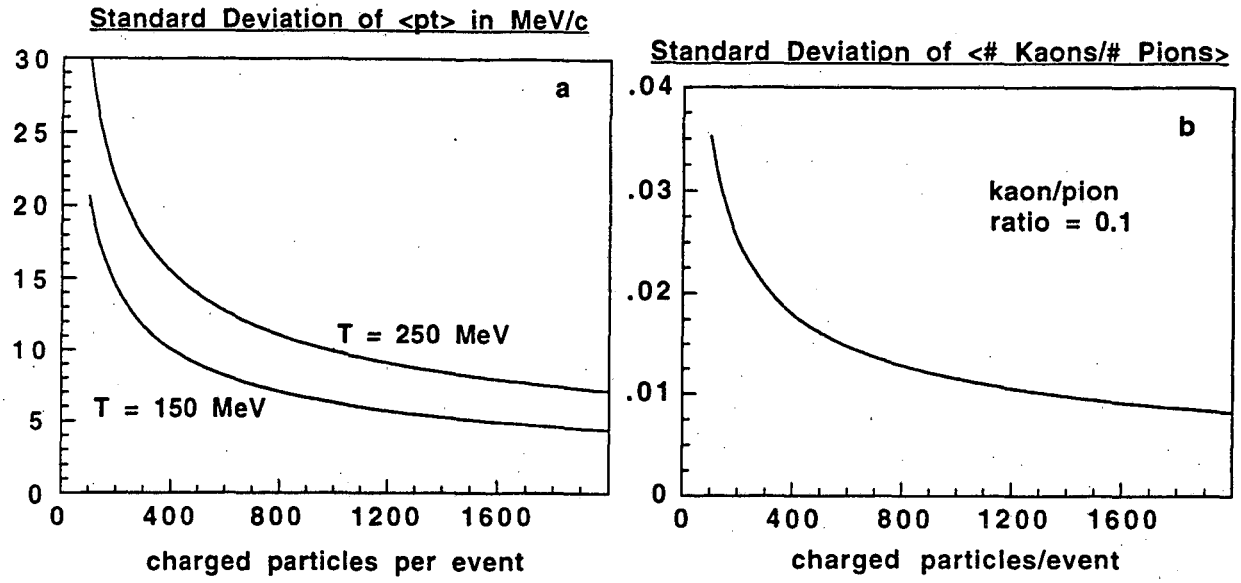

Figure 3. Plotted as a function of the charged-particle multiplicity measured in an event are the standard deviations of a) the measured $\langle p_t \rangle$ for single events generated with a Boltzmann distribution with temperatures of 150 MeV and 250 MeV (corresponding to $\langle p_t \rangle$ = 375 and 610, respectively) and b) the ratio K/π assuming that $\langle K/\pi \rangle = 0.1$.

Another unique feature of STAR is its ability to measure strange and anti-strange baryons (e.g. K^o_s, $\bar{\Lambda}$, Λ, Ξ^-, $\bar{\Xi}^-$, Ω^-) over a wide rapidity interval about midrapidity. Enhancements to the strange antibaryon content due to QGP formation have been predicted.[19] Furthermore, the multiply-strange baryons (Ξ^-, $\bar{\Xi}^-$, Ω^-) may be more sensitive to the existence of the QGP.[20]

The production cross section of ϕ-mesons can be measured *inclusively* in STAR via the decay $\phi \Rightarrow K^+ + K^-$. Measurement of the yield of the ϕ, which is an $s\bar{s}$ pair, places a more stringent constraint on the origin of the observed flavor composition[21] than the K/π ratio and is expected to be more sensitive to the presence of a QGP. The ϕ production rate is also expected to be extremely sensitive to changes in the quark masses[22,23] due to a possible chiral phase transition at high energy densities.

3.4 Hanbury-Brown and Twiss (HBT) Interferometry

Correlations between identical bosons provide information on the freezeout geometry, the expansion dynamics and possibly the existence of a QGP.[24] It will be unprecedented to measure the pion source parameters via pion correlation analysis on an *event-by-event* basis and to correlate them with other event observables. In an individual event with 1000 negative pions within $|\eta| < 1$, the number of $\pi^-\pi^-$ pairs will be $n_{\pi^-}(n_{\pi^-}-1)/2$ = 500,000. This is similar to the accumulated statistics published in most papers on the subject.

The correlations of like-sign charged kaons or pions will be measured on an *inclusive* basis to high accuracy. The dependence of the source parameters on the transverse momentum components of the particle pairs will be measured with high statistics.

Measurement of correlations between unlike-sign pairs will yield information on the Coulomb corrections and effects of final state interactions. The KK correlation is less affected by resonance decays after hadronic freeze-out than the $\pi\pi$ correlations. The K s are expected to freeze out earlier[25] than π s in the expansion. Depending upon the baryo-chemical potential and the existence of a QGP, the K^+ and K^- are also expected to freeze out at different times.

By reconstructing the decay topologies of $K^o_s \rightarrow \pi^+\pi^-$, STAR will be able to measure $K^o_s K^o_s$ correlations.[9] In this case the absence of Coulomb repulsion, as compared to like-sign charged particle correlations, will enable a more precise measurement of the large source dimensions expected at RHIC. Since the K^o_s is not a strangeness eigenstate, the $K^o_s K^o_s$ correlations will contain an interference term which should provide additional space-time information and exhibit strangeness distillation effects in regions where the baryochemical potential is significant.[26]

3.5 Electromagnetic/Charged Particle Energy Ratio

The measurement of EM energy vs. charged-particle energy is an important correlation to measure in the search for the QGP and other new physics. The unexplained imbalance between charged particle and neutral energy observed in Centauro and other cosmic ray events emphasizes the need for EM/charged particle measurements.[27]

3.6 Fluctuations in Energy, Entropy, Multiplicity and Transverse Momentum

It has long been known that a prime, general indicator of a phase transition is the appearance of critical dynamical fluctuations in a narrow range of conditions. Such critical fluctuations can only be seen in individual events where the statistics are large enough to overcome uncertainties ($\sqrt{N}$) due to finite particle number fluctuations. The large transverse energy and multiplicity densities at midrapidity in central collisions allow *event-by-event* measurement of fluctuations in particle ratios, energy density, entropy density and flow of different types of particles as a function of p_t, rapidity, and azimuthal angle. Fluctuations have been predicted to arise from the process of hadronization of a QGP.[28]

4. SUMMARY

It should be emphasized that the capability of measuring several different observables event-by-event is unique to STAR. Events can be characterized event-by-event by their temperature, flavor content, transverse energy density, multiplicity density, entropy density, degree of fluctuations, occurrence of jets and source size. The presence of a QGP is not likely to be observed in an average event, nor is it expected to be observed in a large fraction of events. Since there is no single clearly established signature of the QGP, access to many observables simultaneously will be critical for identifying the rare events in which a QGP is formed.

ACKNOWLEDGMENTS

We thank Joy Lofdahl for assistance with the manuscript. This work was supported in part by the Director, Office of Energy Research, Division of Nuclear Physics of the Office of High Energy and Nuclear Physics of the U.S. Department of Energy under contract DE-AC03-76SF00098.

REFERENCES

[1] E. Feenberg and H. Primakoff, *Phys. Rev.* **70**, 980 (1946); A.R. Bodmer, *Phys. Rev.* **D4**, 1601 (1971); G. Baym and S.A. Chin, *Phys. Lett.* **62B**, 241 (1976).

[2] T.D. Lee and G.C. Wick, *Phys. Rev.* **D9**, 2291 (1974).

[3] T.D. Lee, *Rev. Mod. Phys.* **47**, 267 (1975).

[4] J.C. Collins and M.J. Perry, *Phys. Rev. Lett.* **34**, 1353 (1975); G. Chapline and M. Nauenberg, *Phys. Rev.* **D16**, 450 (1977); L. Susskind, *Phys. Rev.* **D20**, 2610 (1979).

[5] See for example B. Mueller, Particle Production in Highly Excited Matter, ed. H.H. Gutbrod and J. Rafelski, Plenum Press, p. 11 (1993).

[6] K. Geiger and B. Mueller, *Nucl. Phys.* **B369**, 600 (1992).

[7] See presentations of K. Geiger, E. Shuryak and M. Gyulassy, Proceedings of this Conference.

[8] J. Kapusta, *Nucl. Phys.* **61**, 461 (1980); J. Kuti et al., *Phys. Lett.* **95B**, 75 (1980); H. Satz, *Ann. Rev. Nucl. Part. Sci.* **35**, 245 (1985).

[9] *Conceptual Design Report for the Solenoidal Tracker At RHIC*, The STAR Collaboration, PUB-5347 (1992).

[10] See presentations of X.N. Wang and M. Gyulassy, Proceedings of this Conference.

[11] K. Kajantie, P.V. Landshoff and J. Lindfors, *Phys. Rev. Lett.* **59**, 2527 (1987).

[12] K.J. Eskola, K. Kajantie and J. Lindfors, *Nucl. Phys.* **B323**, 37 (1989).

[13] X.N. Wang, Lawrence Berkeley Laboratory Report LBL-28789 (1990).

[14] X.N. Wang and M. Gyulassy, *Phys. Rev. Lett.* **68**, 1480 (1992).

[15] E.V. Shuryak and O.V. Zhirov, *Phys. Lett.* **B89**, 253 (1980) and *Phys. Lett.* **B171**, 99 (1986).

[16] P.V. Landshoff, *Nucl. Phys.* **A498**, 217 (1989).

[17] R. Hagedorn and J. Rafelski, *Phys. Lett.* **97B**, 180 (1980); J. Rafelski and B. Mueller, *Phys. Rev. Lett.* **48**, 1066 (1982); P. Koch, B. Mueller and J. Rafelski, *Phys. Rep.* **142**, 167 (1986).

[18] N.K. Glendenning and J. Rafelski, *Phys. Rev.* **C31**, 823 (1985); K.S. Lee, M.J. Rhoades-Brown and U. Heinz, *Phys. Rev.* **C37**, 1452 (1988).

[19] J. Rafelski and A. Schnabel, "Intersections Between Nuclear and Particle Physics," *AIP Proceedings* **No. 176**, 1068 (1988).

[20] J. Rafelski, *Phys. Rep.* **88**, 331 (1982).

[21] A. Shor, *Phys. Rev. Lett.* **54**, 1122 (1985).

[22] R. D. Pisarski and F. Wilczek, *Phys. Rev.* **D29**, 338 (1984).

[23] T. Hatsuda and T. Kunihiro, *Phys. Lett.* **B185**, 304 (1987).

[24] S. Pratt, *Phys. Rev.* **D33**, 1314 (1986); G. Bertsch, M. Gong and M. Tohyama, *Phys. Rev.* **C37**, 1896 (1988) and G. Bertsch, *Nucl. Phys.* **A498**, 151c (1989).

[25] K.S Lee, M.J. Rhoades-Brown and U. Heinz, *Phys. Rev.* **C37**, 1463 (1988).

[26] M. Gyulassy, Lawrence Berkeley Laboratory Preprint LBL-32051 (1992).

[27] J.D. Bjorken and L.D. McLerran, *Phys. Rev.* **D20**, 2353 (1979) and Y. Takahashi and S. Dake, *Nucl. Phys.* **A461**, 263C (1987).

[28] M. Gyulassy, *Nucl. Phys.* **A400**, 31c (1983); L. Van Hove, *Z. Phys.* **C27**, 135 (1985).

LAWRENCE BERKELEY LABORATORY
UNIVERSITY OF CALIFORNIA
TECHNICAL INFORMATION DEPARTMENT
BERKELEY, CALIFORNIA 94720