LBL-35092
UC-406

Lawrence Berkeley Laboratory
UNIVERSITY OF CALIFORNIA

Design and Characterization of a Pulsed X-Ray Source for Fluorescent Lifetime Measurements

S.C. Blankespoor

December 1993

Donner Laboratory
Biology & Medicine Division

LOAN COPY
Circulates
for 4 weeks
Bldg. 50 Library.
LBL-35092
Copy 2

Prepared for the U.S. Department of Energy under Contract Number DE-AC03-76SF00098

DISCLAIMER

This document was prepared as an account of work sponsored by the United States Government. Neither the United States Government nor any agency thereof, nor The Regents of the University of California, nor any of their employees, makes any warranty, express or implied, or assumes any legal liability or responsibility for the accuracy, completeness, or usefulness of any information, apparatus, product, or process disclosed, or represents that its use would not infringe privately owned rights. Reference herein to any specific commercial product, process, or service by its trade name, trademark, manufacturer, or otherwise, does not necessarily constitute or imply its endorsement, recommendation, or favoring by the United States Government or any agency thereof, or The Regents of the University of California. The views and opinions of authors expressed herein do not necessarily state or reflect those of the United States Government or any agency thereof or The Regents of the University of California and shall not be used for advertising or product endorsement purposes.

Lawrence Berkeley Laboratory is an equal opportunity employer.

DISCLAIMER

This document was prepared as an account of work sponsored by the United States Government. While this document is believed to contain correct information, neither the United States Government nor any agency thereof, nor the Regents of the University of California, nor any of their employees, makes any warranty, express or implied, or assumes any legal responsibility for the accuracy, completeness, or usefulness of any information, apparatus, product, or process disclosed, or represents that its use would not infringe privately owned rights. Reference herein to any specific commercial product, process, or service by its trade name, trademark, manufacturer, or otherwise, does not necessarily constitute or imply its endorsement, recommendation, or favoring by the United States Government or any agency thereof, or the Regents of the University of California. The views and opinions of authors expressed herein do not neccssarily state or reflect those of the United States Government or any agency thereof or the Regents of the University of California.

LBL-35092
UC-406

Design and Characterization of a Pulsed X-Ray source for Fluorescent Lifetime Measurements

STEPHEN C. BLANKESPOOR
Master's Project Report

DEPARTMENT OF ELECTRICAL ENGINEERING AND COMPUTER SCIENCE
University of California

and

LIFE SCIENCES DIVISION
Lawrence Berkeley Laboratory
University of California
Berkeley, CA 94720

DECEMBER 1993

This work was supported by the Director, Office of Energy Research, Office of Basic Energy Sciences, Materials Sciences Division, of the U.S. Department of Energy under Contract No. DE-AC-76SF00098.

recycled paper

ACKNOWLEDGMENTS

I thank Dr. Stephen Derenzo, my research advisor, for his support and guidance in my completion of my degree and for his contributions to the contents of this report. I also thank Dr. William Moses for his ready counsel and encouragement in my work and for his contributions to the work itself, Dr. Carolyn Rossington for her contributions in equipment, analysis, and editing, Dr. David Attwood for his willingness to be my second reader on such short notice, Dr. K. Oba and Dr. M. Ito for their work at Hamamatsu Photonics K. K., and Matt Ho and Tony Vuletich for technical assistance.

On a more personal note, I thank God for giving me the energy and ability to complete this work, I thank my parents for their constant support, encouragement, and prayers throughout my academic career, and I thank the rest of my family, my house mates, and my friends for their encouragement and prayers.

Finally, I thank the agencies which provided the financial support for this project. My support came in part from the Whitaker Foundation and in part from Public Health Service Grant No. 5 T32 GM08155-07, awarded by the General Medical Institutes, Department of Health and Human Services. This project was also supported in part by the Director, Office of Energy Research, Office of Health and Environmental Research, Medical Applications and Biophysical Research Division of the U.S. Department of Energy under contract No. DE-AC03-76SF00098, and in part by Public Health Service Grant Nos. P01 HL25840 and R01 CA48002, awarded by the National Heart Lung and Blood and National Cancer Institutes, Department of Health and Human Services.

ABSTRACT

To search for new, fast, inorganic scintillators, my colleagues and I have developed a bench-top pulsed x-ray source for determining fluorescent lifetimes and wavelengths of compounds in crystal or powdered form. This source uses a light-excited x-ray tube which produces x-rays when light from a laser diode strikes its photocathode. The x-ray tube has a tungsten anode, a beryllium exit window, a 30 kV maximum tube bias, and a 50 μA maximum average cathode current. The laser produces 3×10^7 photons at 650 nm per ~100 ps pulse, with up to 10^7 pulses/sec. The time spread for the laser diode, x-ray tube, and a microchannel plate photomultiplier tube is less than 120 ps fwhm. The mean x-ray photon energy, at tube biases of 20, 25, and 30 kV, is 9.4, 10.3, and 11.1 keV, respectively. We measured 140, 230, and 330 x-ray photons per laser diode pulse per steradian at tube biases of 20, 25, and 30 kV, respectively. Background x-rays due to dark current occur at a rate of 1×10^6 and 3×10^6 photons/sec/steradian at tube biases of 25 and 30 kV, respectively. Data characterizing the x-ray output with an aluminum filter in the x-ray beam are also presented.

I. INTRODUCTION AND MOTIVATION

The pulsed x-ray source presented here was developed as a new tool in an ongoing search for scintillators that could improve the performance of PET (positron emission tomography) detector crystals. Faster and brighter scintillators may improve both the detector recovery time and the ability to reject events that Compton scatter in the patient. New scintillators could also reduce the detector cost. In previous efforts to find new scintillators, an electron synchrotron was used in single-bunch mode to measure the x-ray excited fluorescence of over 400 compounds [1, 2], but use of a synchrotron is costly and time-consuming. In an effort to reduce the cost and increase the ease of making these measurements, my colleagues and I have developed a bench-top pulsed x-ray source.

The design priorities for the pulsed x-ray source included compact size, low cost, the capability to observe fluorescence from powders as well as crystals, and the capability to determine scintillation time structure on the order of tens of picoseconds. The incorporation of a light-excited x-ray tube manufactured to produce very brief (≈ 100 ps) pulses of x-rays [3] made these priorities realistic. This

report describes the design and characterizes the performance of the pulsed x-ray source. In doing so, it draws extensively upon the material contained in references [4] and [5].

II. System Design

A. General Design

The two primary components of the pulsed x-ray source are the light-excited x-ray tube and the diode laser, as shown diagramatically in Figure 1. The x-ray tube is essentially a single-stage photomultiplier tube, with a photocathode which releases electrons when light is absorbed. The electrons are accelerated across 30 kV (typically) into a tungsten anode, and x-rays are produced when the electrons impact the anode.

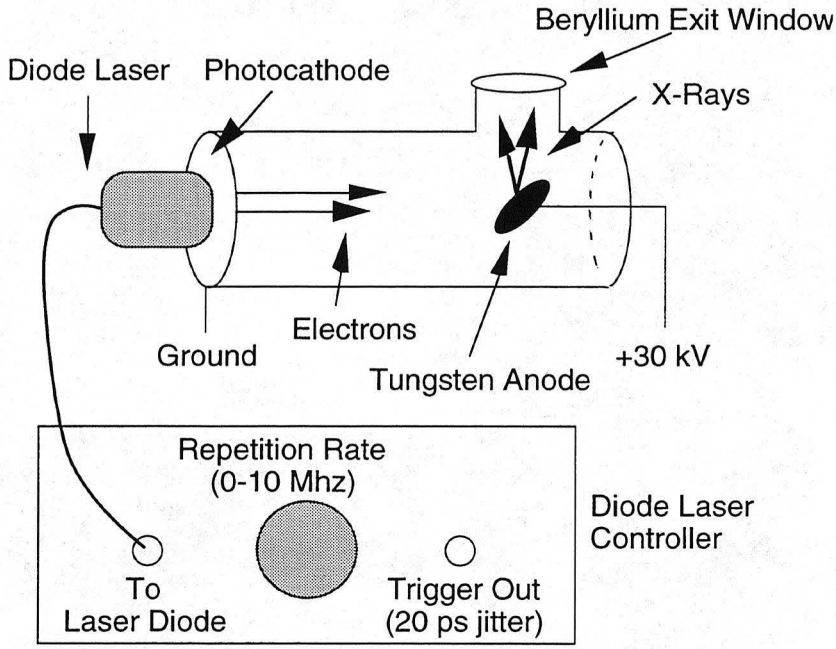

Figure 1. Schematic of the pulsed x-ray source. A laser diode excites the photocathode with <97 ps pulses at ≤10 MHz.

The light-excited design of the x-ray tube makes it possible to generate short pulses of x-rays simply by directing short pulses of light onto the photocathode of the tube. The repetition rate of the x-ray pulses can be varied by changing the repetition rate of the light pulses. For the pulsed x-ray source presented here, a diode laser was used as the light source because of its short laser pulse duration, easily varied repetition rate, and relatively low cost.

Because this pulsed x-ray source generates ionizing radiation, extensive safety precautions were necessary in the system design. Most notably, an interlock circuit was implemented such that no single point failure will result in operator exposure to x-rays. (Electrical design drawings for the safety interlock circuit are provided in Appendix A, and both a safety evaluation and a safety test procedure for the system are included in Appendix B.)

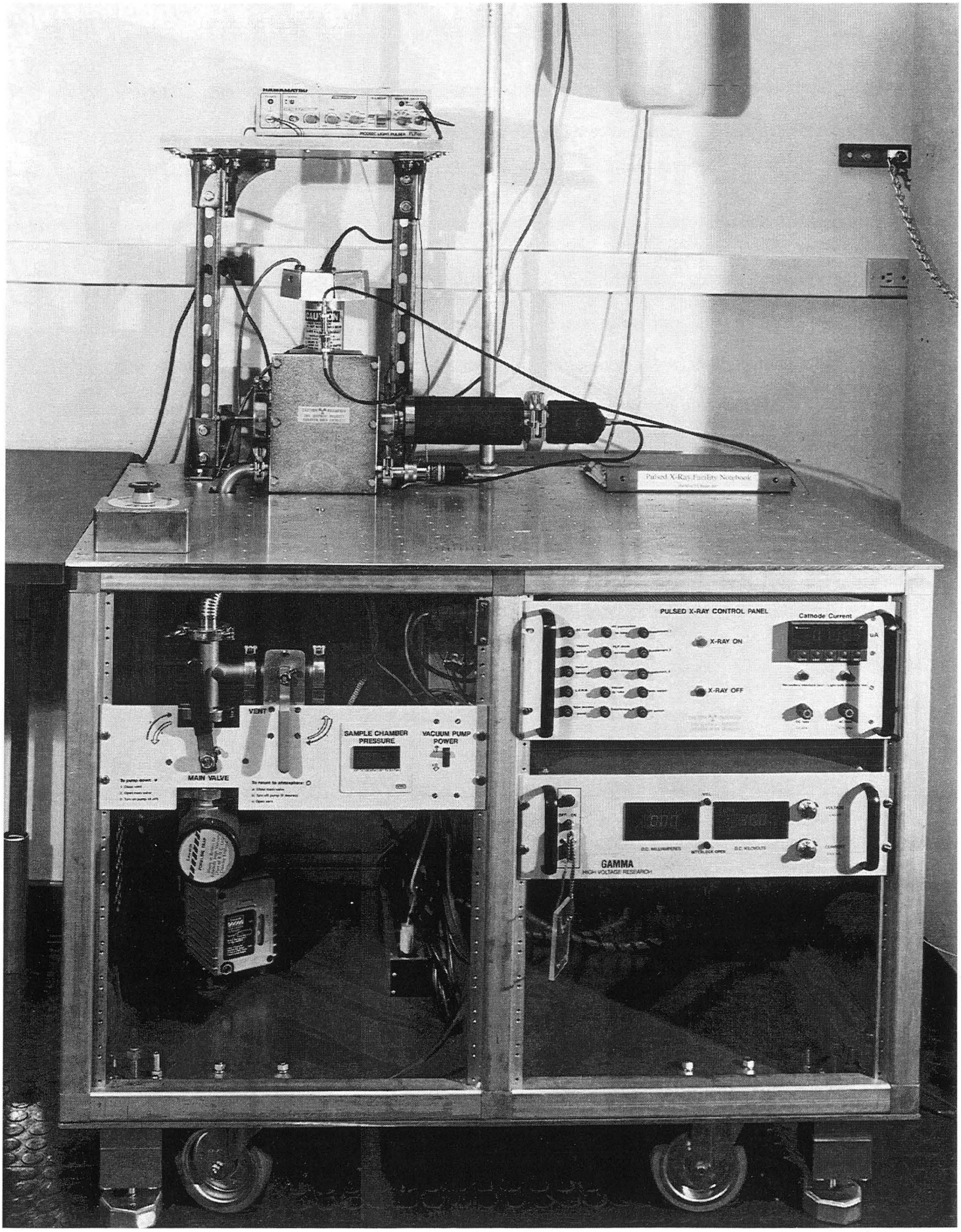

Figure 2. Photograph of the pulsed x-ray source. CBB 9310-6823

Figure 2 is a photograph of the pulsed x-ray source. The steel box on the table top is the sample chamber, and directly behind it is the x-ray tube. (Mechanical design drawings of the sample chamber and the x-ray tube housing are included in Appendix C.) The laser diode is mounted above the x-ray tube, and the laser diode controller is on the stand above the table top. The sample chamber is evacuated by the pump under the table top. As the system is configured in this photograph, scintillation light passes through the quartz telescope on the right side of the sample chamber and into a microchannel plate photomultiplier tube. The high-voltage power supply, which powers the x-ray tube, and the x-ray control panel, which includes the safety interlocks and a current meter for monitoring the x-ray tube cathode current, are both mounted in the lower right portion of the table.

B. Component Characteristics

The characteristics of the diode laser and the light excited x-ray tube are summarized in Table I and Table II, respectively.

Table I. Characteristics of Hamamatsu PLP-01 Light Pulser with C3551-01 Controller and LDH065 Laser Diode Head

Emission wavelength	650 nm
Peak power	>100 mW
Average power (max)	0.1 mW
Pulse width	<97 ps fwhm
Pulse repetition rate	dc to 10 MHz
Photons per pulse	$> 10^7$
Timing pulse jitter	±10 ps

Table II. Characteristics of Hamamatsu N5084 Light-Excited X-Ray Tube

Overall tube length	152 mm
Tube Diameter	52 mm
Photocathode	S-20
Quantum efficiency @ 650 nm	> 10%
Photocathode diameter	12 mm
Target material (anode)	Tungsten (45°)
Output window material	Beryllium
Output window diameter	20 mm
Output window thickness	0.5 mm
Cooling	Natural air
Tube voltage (max)	30 kV
Average tube current (max)	50 μA
Peak tube current	2 A (2 μs duration)
Photocathode photon rate (max)	3×10^{15}/s @ 10% QE

III. SYSTEM CHARACTERIZATION

A. System Impulse Response

We measured a 97 ps fwhm time spread for the laser diode coupled to a microchannel photomultiplier tube. A 41 ps fwhm (full-width at half-maximum) time spread for the photomultiplier tube was derived from a factory-measured combined time spread of 50.8 ps for the photomultiplier tube and a diode laser by assuming addition in quadrature of the pulse widths and using the known 30 ps laser pulse width for

that laser. Deconvolving this 41 ps contribution from the 97 ps measurement yields a value of 88 ps fwhm for the pulse duration of our laser. The theoretical estimate for the time spread of the x-ray tube is 31 ps, based on the design of the tube [6]. By combining in quadrature the 88 ps fwhm laser diode pulse width with the 31 ps estimated time spread of the x-ray tube, we obtain a 93 ps fwhm predicted x-ray pulse width. Note, however, that this width may be optimistic since addition in quadrature is valid only if the time spreads are Gaussian, which is not exactly true, and since the determination of the 41 ps fwhm time spread for the photomultiplier tube did not consider the time spread of the electronics. (See [7] for further discussion of the predicted impulse response.)

We are not equipped to measure directly the x-ray pulse width. (Such a measurement could be made using an x-ray streak camera, as is done in reference [8] for a similar application.) As an approximation to this measurement, we added an ultra-fast scintillator and a microchannel plate photomultiplier tube to the system in order to obtain fluorescence data as an upper limit on the impulse response of the laser diode, the x-ray tube, and the photomultiplier tube. The scintillator used was malachite green oxalate in crystal form, which likely has a fluorescence decay time of 10-30 ps (based on fluorescence decay times of malachite green solutions [9]). The data were collected over 235,000 seconds. (The procedure for obtaining fluorescence decay time spectra is included in Appendix D.)

The observed fluorescence time structure of the malachite green is shown in Figure 3. As noted in the figure, the full-width at half-maximum for the peak is 120 ps. We can conclude, then, that the system impulse response for the laser diode, x-ray tube, and microchannel plate photomultiplier tube has a width less than 120 ps, which is consistent with the above estimate of 93 ps for the x-ray pulse width. The secondary peak in Figure 3 has not yet been explained and further measurements are required to determine its origin, but it is a stable artifact.

B. Energy Spectra of X-Rays

The measured spectral output of the x-ray source was obtained using a lithium-drifted silicon detector. The detector was cooled to liquid nitrogen temperatures and had an energy resolution of 180 eV fwhm at 2 μs peaking time. The detector was positioned 14 cm from the x-ray tube anode, with a lead pinhole collimator placed over the detector to limit the count rate. Each spectrum was collected over 1800

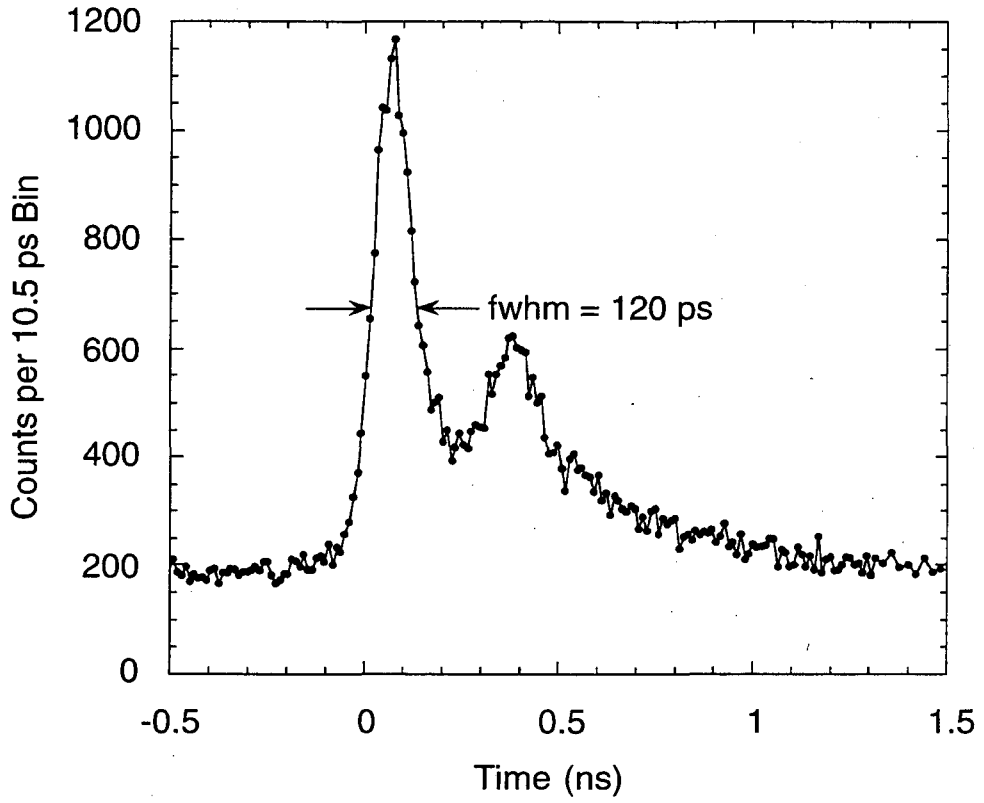

Figure 3. Observed fluorescence time spectrum for malachite green oxalate crystals, which provides an upper limit of 120 ps for the system impulse response.

seconds using a 200 kHz laser diode pulse repetition rate, and corrections were made for limited absorption of high-energy x-rays in the 6 mm-thick detector (a 21% adjustment at 30 keV). The data in these energy spectra were used for the remaining figures. (The background flux of the x-ray source in the absence of laser light has been subtracted from the following figures, with an extrapolated value used for the case with a 32 kV tube bias and no filtration. This background flux will be discussed in a later section.)

Figure 4 shows the spectral output of the pulsed x-ray source at various tube biases. These spectra are typical for x-rays generated by an x-ray tube with a tungsten anode, with bremsstrahlung radiation at high energies and the characteristic tungsten peaks around 10 keV. The additional peaks between 5 keV and 8 keV correspond to iron, chromium, manganese, and copper characteristic peaks from fluorescence of various system components.

In practice, we place a 0.51 mm aluminum filter in the x-ray beam to eliminate most of the low-energy x-ray photons. These low energy photons would be absorbed in the quartz cuvette holding the sample; they

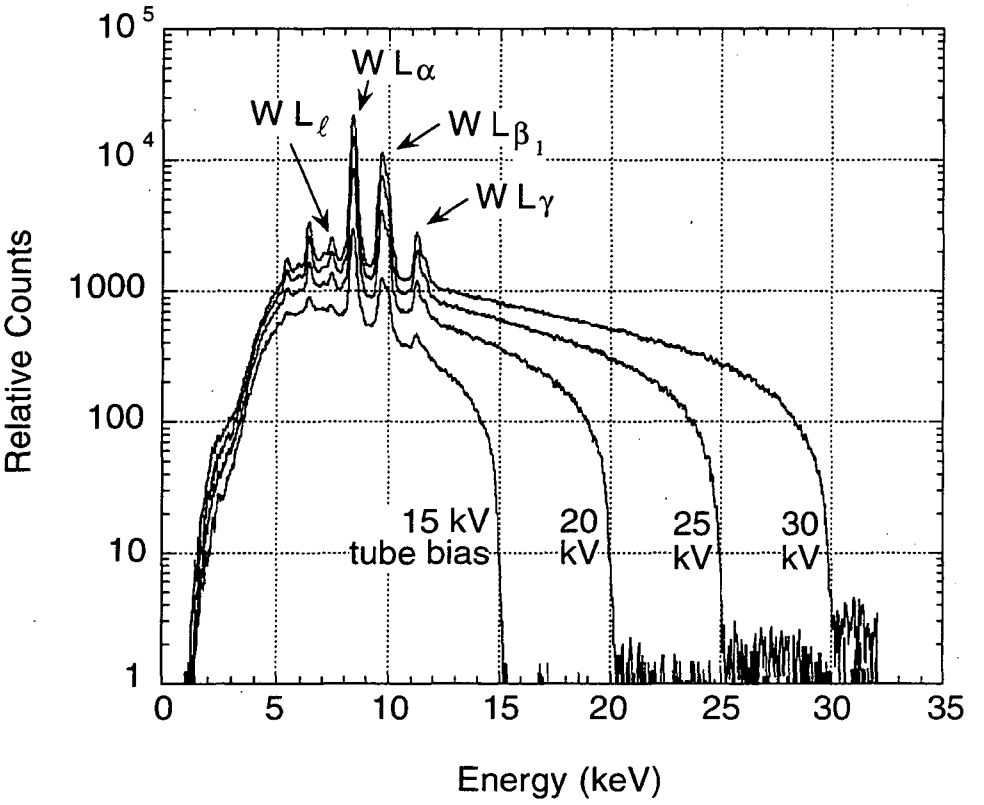

Figure 4. Energy spectra of the x-ray source at various tube biases.

would not contribute to the fluorescence signal from the sample and in fact would generate a low level of fluorescence from the quartz. The spectra which result after aluminum filtering are shown in Figure 5.

As a confirmation that the spectra of Figure 4 and Figure 5 are indeed typical for x-rays generated by an x-ray tube with a tungsten anode, I compared the observed spectra at 30 kV tube bias to theoretical spectra calculated using the TUBDET program from Lawrence Livermore National Laboratories [10]. Figure 6 shows both the observed x-ray spectra and the theoretical spectra. The observed spectra are scaled to compensate for differences in lead pinhole size, and the two theoretical spectra are independently scaled to match the observed spectra in counts at 18 keV. (The scalings of the theoretical spectra differ by 15%, which is consistent with the 25% observed flux error proposed in the caption of Figure 8.) The theoretical and observed spectra differ only in low energy content and in the slope at high energies. The difference at the low-energy end was previously explained in this report as fluorescence from other system components. The difference in slope at the high-energy end has not been explained, although it may be a result of inconsistencies between the TUBDET calculations and the non-traditional design of the x-ray tube.

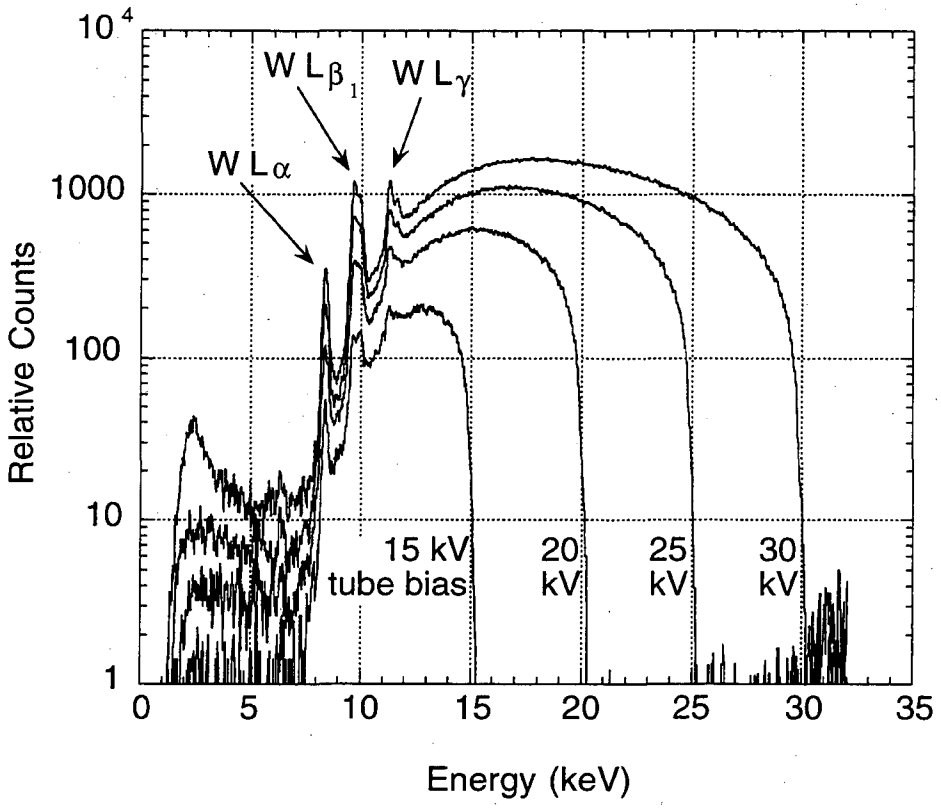

Figure 5. Energy spectra of the x-ray source with a 0.51 mm aluminum filter.

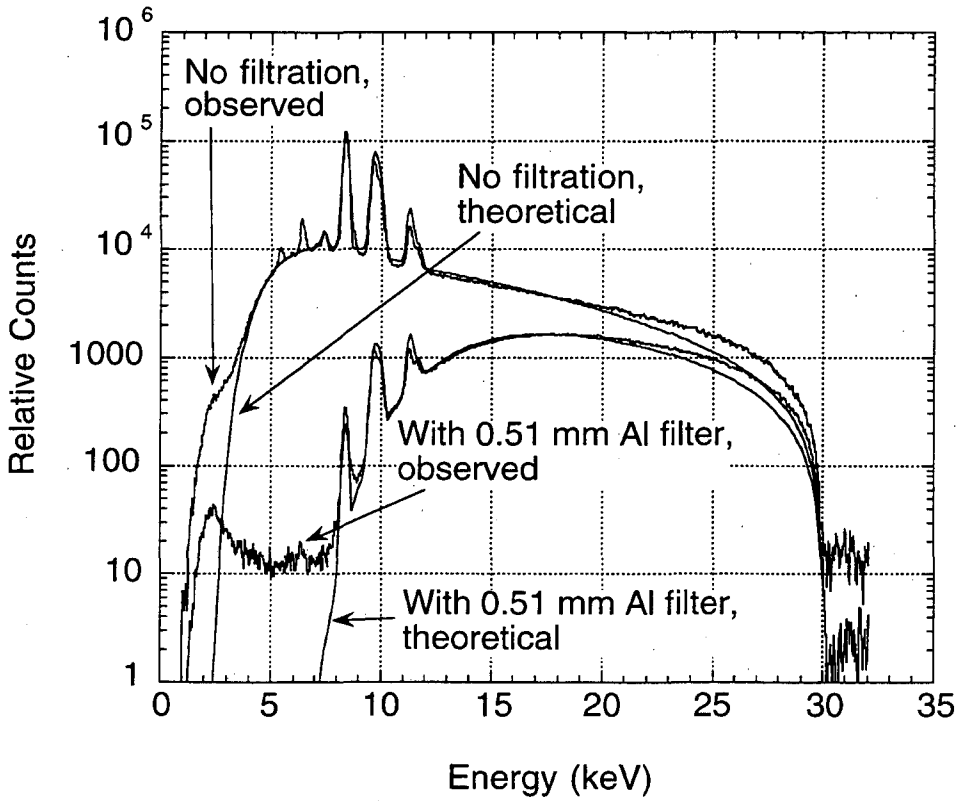

Figure 6. Comparison of observed and theoretical spectra at 30 kV tube bias.

Figure 7 shows the mean x-ray photon energies as a function of tube bias for the spectra shown in figures 4 and 5 and for spectra obtained at a tube bias of 32 kV. As expected, the aluminum filter significantly increases the mean photon energy.

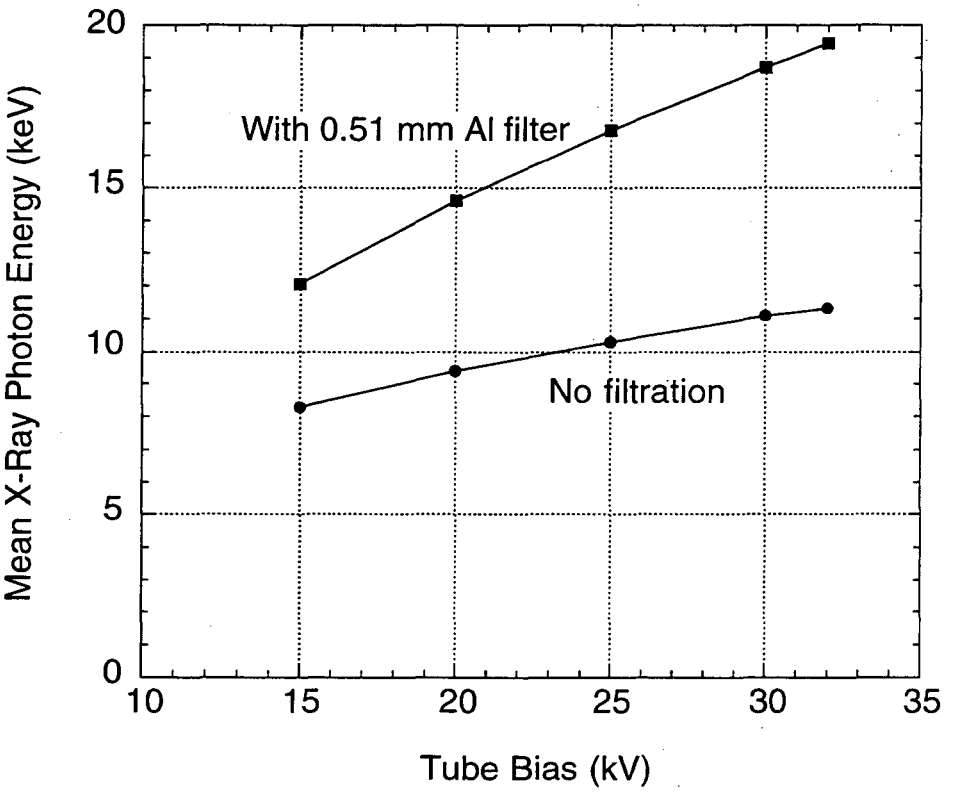

Figure 7. Mean energy of x-ray photons at various tube biases, with and without the aluminum filter.

C. X-Ray Flux

The relative flux of x-ray photons was determined by integrating the counts in the spectra and making minor corrections (<2%) for system dead time. This relative flux was converted to the absolute flux in number of x-ray photons per laser diode pulse per steradian by using the distance from the x-ray tube anode to the detector, the size of the lead collimator pinhole, and the laser pulse repetition rate. The result is shown in Figure 8. The flux increases nearly linearly with tube bias.

Multiplying the flux of Figure 8 by the mean photon energy of Figure 7 yields the energy deposited per laser diode pulse per steradian, which is shown in Figure 9. As expected, the higher mean photon energy for the filtered case compensates somewhat for the lower flux, so that the filtration loss is not as dramatic for energy deposited as for photon flux. Knowledge of the energy deposited per laser diode pulse is important for determining fluorescence efficiencies.

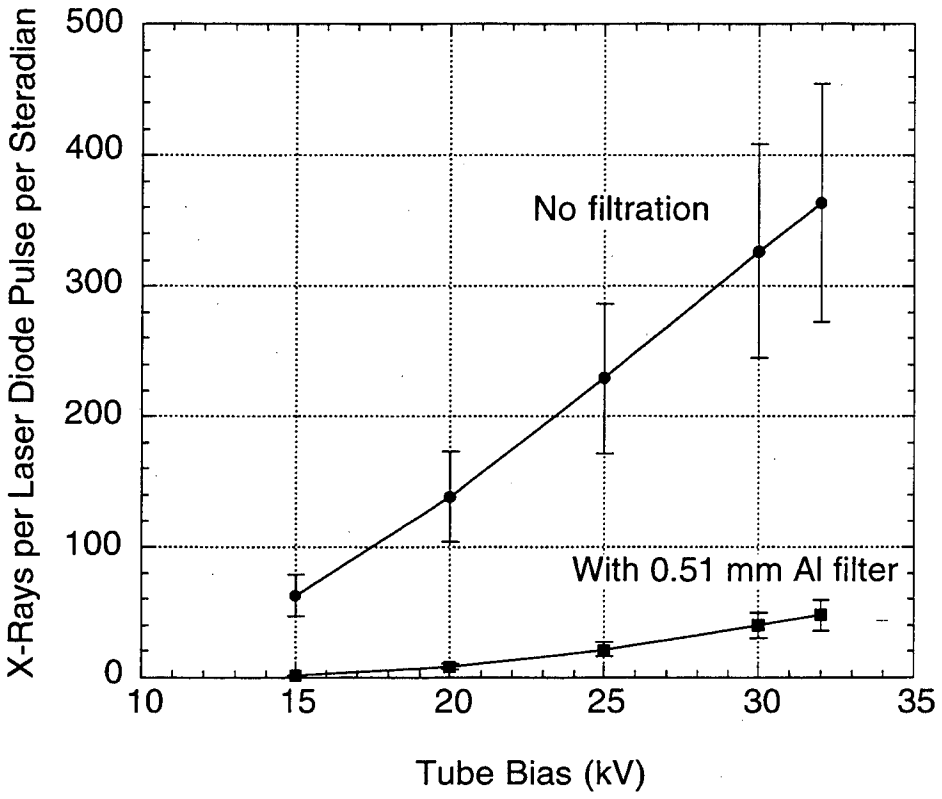

Figure 8. X-ray flux resulting from laser pulses. The 25% error bars (in this figure and figures 9 and 10) are based on the estimated precision of the lead collimator pinhole diameters.

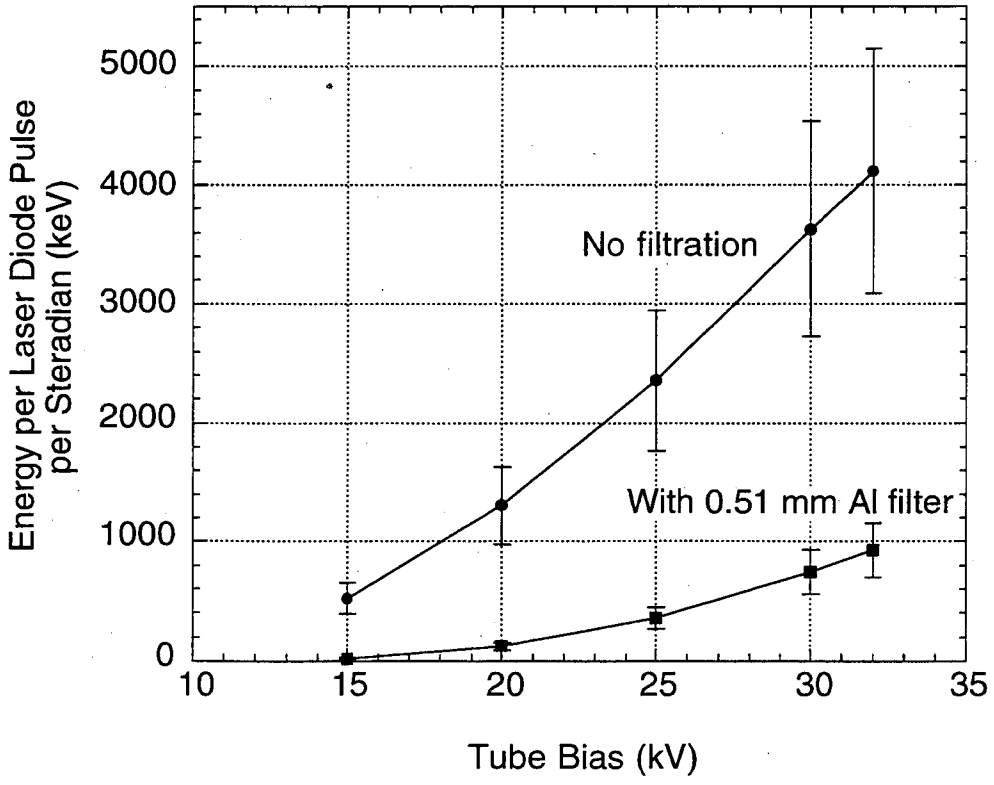

Figure 9. Mean energy deposited per laser diode pulse.

The pulsed x-ray source generates a background x-ray flux in the absence of laser diode light. In the model of the light-excited x-ray tube as a single stage photomultiplier tube, this would be the x-ray flux resulting from dark current. Characterizing this background flux is necessary to determine the extent to which it contributes noise to fluorescence time spectra.

We have observed a significant variation in the background flux over the life of the tube thus far. Two months after we began using the tube, the dark current at 30 kV tube bias decreased by a factor of twenty, apparently as a result of a spontaneous discharge within the x-ray tube. Since that time, the dark current at 30 kV tube bias has increased slightly but remains a factor of ten below the original level.

Figure 10 presents both pre-discharge and post-discharge data for the background flux. The pre-discharge flux data were calculated from the current generated in a photodiode placed in the x-ray beam, with scaling applied (based on laser-induced flux measurements) to compensate for limitations of this method. The post-discharge flux data were determined from spectra of the background flux by the same technique as used for the laser-induced flux above. The background flux tends to increase exponentially with tube bias.

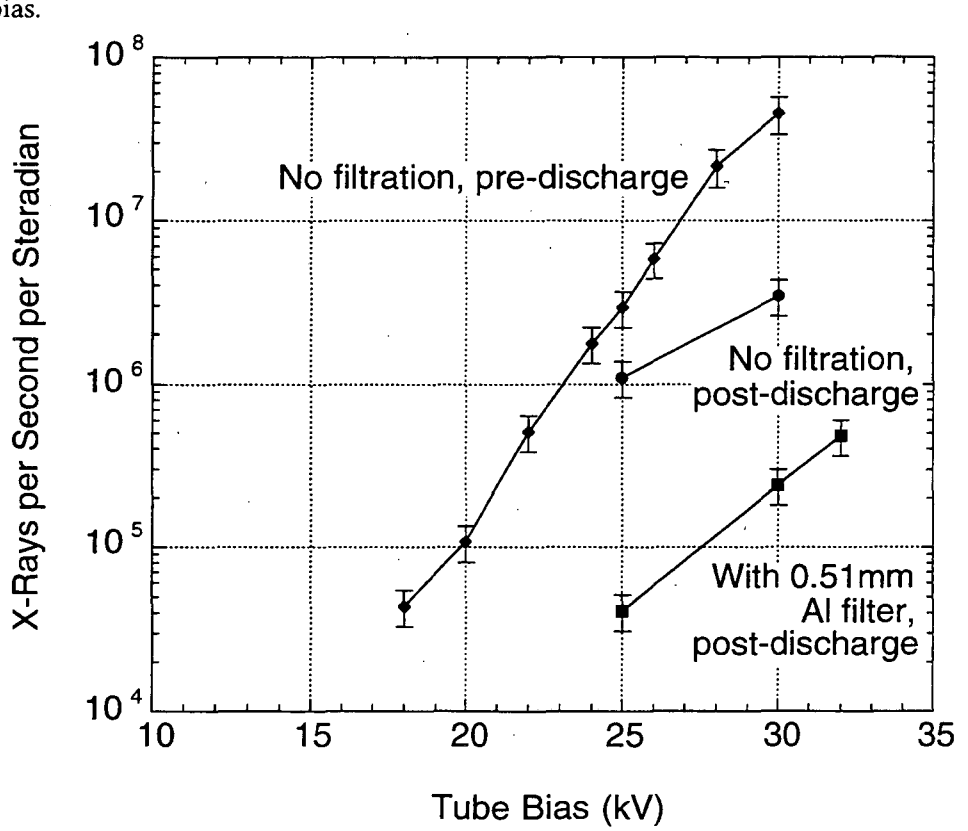

Figure 10. Background x-ray flux in the absence of laser light.

Observations suggest that the background flux rate is independent of laser diode repetition rate. This has not been directly verified, but the tube cathode current at a given tube bias with the laser on appears to be the sum of the dark current at that bias (as measured with the laser off) and a value which is essentially independent of tube bias, as shown in Figure 11. The dark current, then, appears to be independent of laser operation, which suggests that the background flux is independent of laser operation as well.

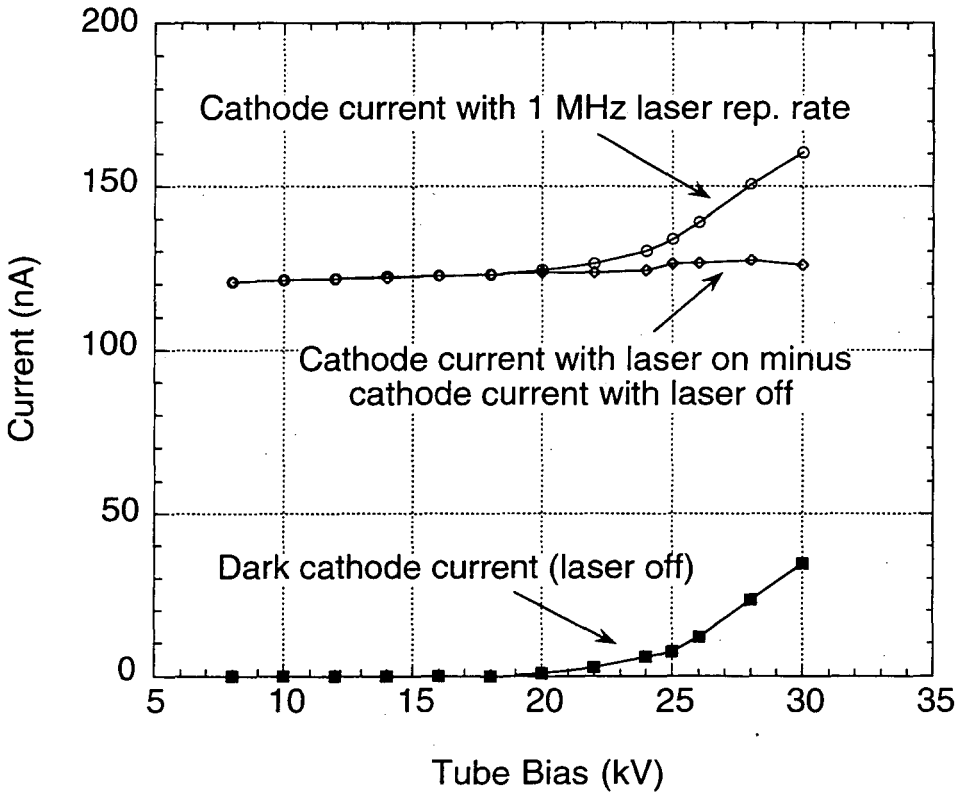

Figure 11. Apparently additive nature of dark current and laser-induced cathode current.

IV. CONCLUSIONS

The pulsed x-ray source developed in our lab has several appealing features for the characterization of fast scintillators. It is a compact, table-top device, and it is relatively inexpensive with a parts cost of about $50,000 (U.S.). It has a pulse width of less than 120 ps fwhm and with a well-characterized impulse response it can be used to determine fluorescence decay times to within 50 ps. The repetition rate of the x-ray pulses can easily be varied by adjusting the laser diode pulse repetition rate. Single fluorescence photons can be detected and spectra can be averaged over time, so that accurate measurements of weak

fluorescence can be made. Finally, a monochromator can readily be incorporated to select fluorescence wavelengths or to obtain fluorescence spectra.

The pulsed x-ray source also has a few limitations, which include the existence of a background flux, a low total flux, and a 30 keV maximum x-ray photon energy. The background flux is a limitation for applications in which timing information is required, but with the use of a high laser repetition rate (or windowing of data acquisition around the laser pulse, or use of a brighter light source) a high ratio of desired x-rays to background x-rays can be achieved. Also, the background flux simply generates a low uniform background in time-averaged fluorescence time spectra. The low total flux is only a limitation for applications requiring a high flux (such as acquisition of fluorescence wavelength spectra) and could be overcome by using a more intense light source. (The laser diode used here generates about 1/500 of the rated x-ray tube cathode current of 50 μA.) The 30 keV maximum photon energy may not be high enough for some applications, but it is sufficient for the intended purpose of scintillator characterization.

V. REFERENCES

[1] S.E. Derenzo, W.W. Moses, R. Perera, et al., "Prospects for new inorganic scintillators," *IEEE Transactions on Nuclear Science,* vol. NS-37, pp. 203-208, 1990.

[2] S.E. Derenzo, W.W. Moses, J.L. Cahoon, et al., "X-ray fluorescence measurements of 412 inorganic compounds," in *Conference Record of the 1991 IEEE Nuclear Science Symposium and Medical Imaging Conference,* Santa Fe, New Mexico, Nov. 1991, vol. 1, pp. 143-147.

[3] K. Oba, "Instrument to measure fluorescence which has occurred in a sample stimulated by x-rays," U.S. patent #4,724,536, issued to Hamamatsu Photonics, Japan, Feb. 9, 1988.

[4] S.E. Derenzo, W.W. Moses, S.C. Blankespoor, M. Ito, and K. Oba, "Design of a pulsed x-ray system for fluorescent lifetime measurements with a timing accuracy of 109 ps," *Conference Record of the 1992 IEEE Nuclear Science Symposium and Medical Imaging Conference*, Orlando, Florida, Oct. 1992, pp. 117-119.

[5] S.C. Blankespoor, S.E. Derenzo, W.W. Moses, C.S. Rossington, M. Ito, and K. Oba, "Characterization of a pulsed x-ray source for fluorescent lifetime measurements," submitted to *IEEE Transactions on Nuclear Science.*

[6] K. Oba, personal communication with S.E. Derenzo, 1993.

[7] S.E. Derenzo, W.W. Moses, and S.C. Blankespoor, "High Resolution Fluorescent Time Spectra of Six Ultra-Fast Powdered Inorganic Scintillators," submitted to *IEEE Transactions on Nuclear Science.*

[8] B. Van Wonterghem and P.M. Rentzepis, "Characteristics of a Ta photocathode for the generation of picosecond x-ray pulses," *Applied Physics Letters*, vol. 56, pp. 1005-1007.

[9] W. Yu, F. Pellegrino, M. Grant, and R.R. Alfano, "Subnanosecond fluorescence quenching of dye molecules in solution," *The Journal of Chemical Physics*, vol. 67, pp. 1766-1773, Aug. 1977.

[10] Nondestructive Evaluation Group, Lawrence Livermore National Laboratories, TUBDET. Contact:. Skip Perkins, Lawrence Livermore National Laboratories, P.O. Box 808 M/S L-333, Livermore, CA 94551, phone 510/422-6792.

Reference to a company or product name does not imply approval or recommendation by the University of California or the U.S. Department of Energy to the exclusion of others that may be suitable.

APPENDIX A: DESIGN OF SAFETY CIRCUITS

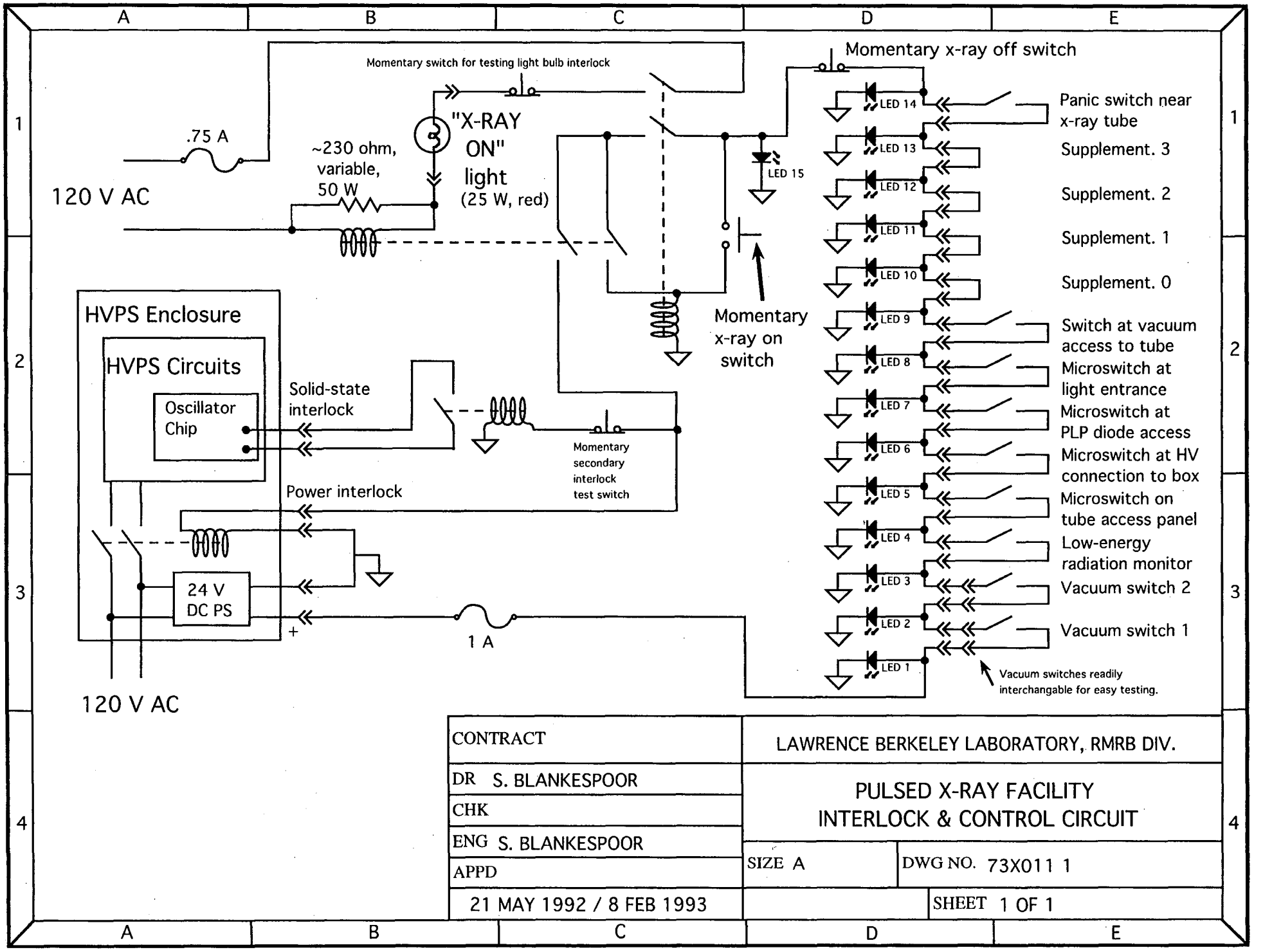
Momentary switch for testing light bulb interlock
Momentary x-ray off switch
.75 A
120 V AC
~230 ohm, variable, 50 W
"X-RAY ON" light (25 W, red)
LED 15
Momentary x-ray on switch
HVPS Enclosure
HVPS Circuits
Oscillator Chip
Solid-state interlock
Momentary secondary interlock test switch
Power interlock
24 V DC PS
+
1 A
120 V AC
LED 14
LED 13
LED 12
LED 11
LED 10
LED 9
LED 8
LED 7
LED 6
LED 5
LED 4
LED 3
LED 2
LED 1
Panic switch near x-ray tube
Supplement. 3
Supplement. 2
Supplement. 1
Supplement. 0
Switch at vacuum access to tube
Microswitch at light entrance
Microswitch at PLP diode access
Microswitch at HV connection to box
Microswitch on tube access panel
Low-energy radiation monitor
Vacuum switch 2
Vacuum switch 1
Vacuum switches readily interchangable for easy testing.
CONTRACT
DR S. BLANKESPOOR
CHK
ENG S. BLANKESPOOR
APPD
21 MAY 1992 / 8 FEB 1993
LAWRENCE BERKELEY LABORATORY, RMRB DIV.
PULSED X-RAY FACILITY
INTERLOCK & CONTROL CIRCUIT
SIZE A
DWG NO. 73X011 1
SHEET 1 OF 1

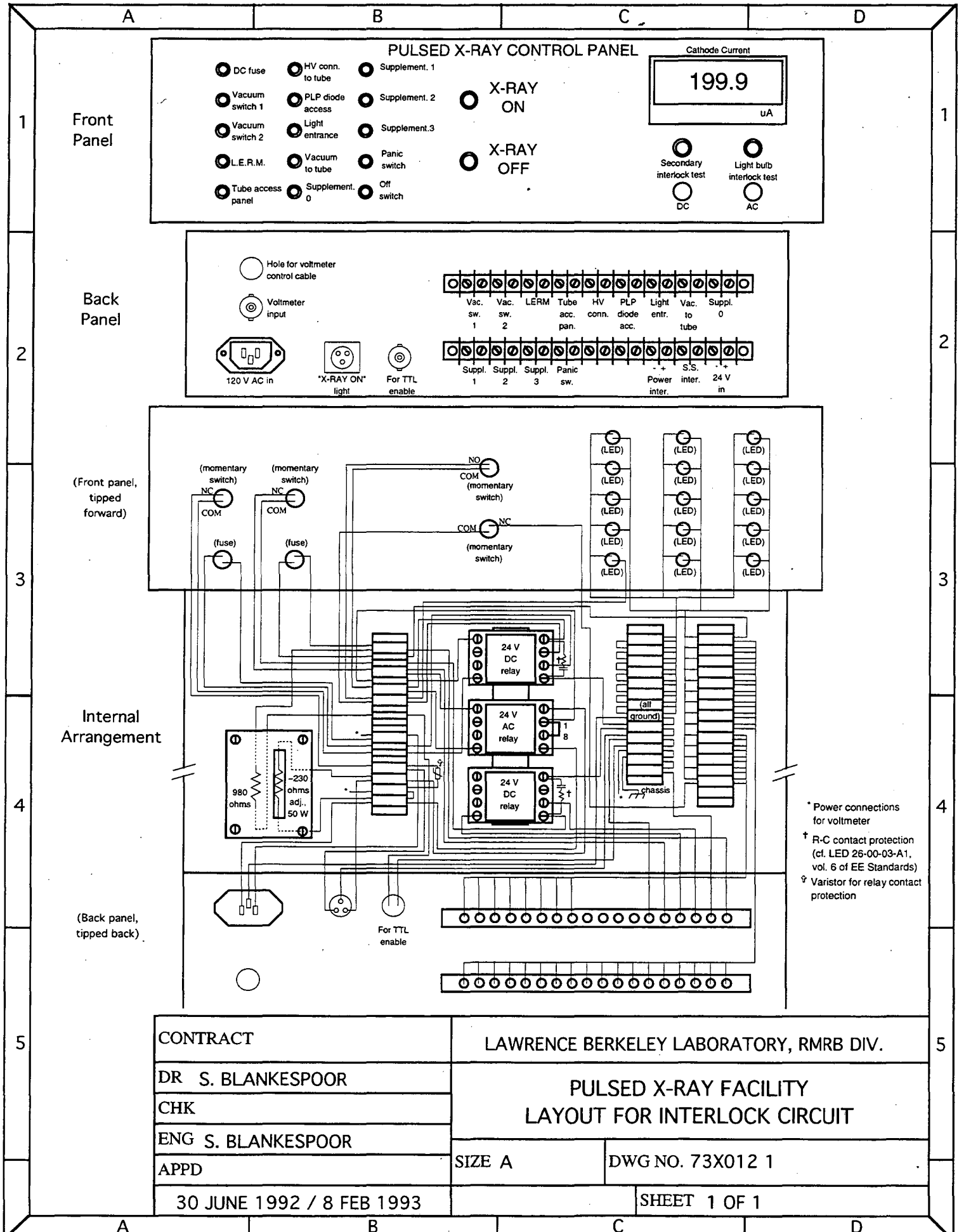
Front Panel
PULSED X-RAY CONTROL PANEL
DC fuse
HV conn. to tube
Supplement. 1
Vacuum switch 1
PLP diode access
Supplement. 2
Vacuum switch 2
Light entrance
Supplement.3
L.E.R.M.
Vacuum to tube
Panic switch
Tube access panel
Supplement. 0
Off switch
X-RAY ON
X-RAY OFF
Cathode Current
199.9
uA
Secondary interlock test
Light bulb interlock test
DC
AC
Back Panel
Hole for voltmeter control cable
Voltmeter input
Vac. sw. 1
Vac. sw. 2
LERM
Tube acc. pan.
HV conn.
PLP diode acc.
Light entr.
Vac. to tube
Suppl. 0
120 V AC in
"X-RAY ON" light
For TTL enable
Suppl. 1
Suppl. 2
Suppl. 3
Panic sw.
Power inter.
S.S. inter.
24 V in
(Front panel, tipped forward)
(momentary switch)
NC
COM
(fuse)
NO
(LED)
Internal Arrangement
24 V DC relay
24 V AC relay
980 ohms
~230 ohms adj., 50 W
(all ground)
chassis
(Back panel, tipped back)
For TTL enable
* Power connections for voltmeter
† R-C contact protection (cf. LED 26-00-03-A1, vol. 6 of EE Standards)
⇧ Varistor for relay contact protection
CONTRACT
LAWRENCE BERKELEY LABORATORY, RMRB DIV.
DR S. BLANKESPOOR
CHK
ENG S. BLANKESPOOR
APPD
PULSED X-RAY FACILITY
LAYOUT FOR INTERLOCK CIRCUIT
SIZE A
DWG NO. 73X012 1
30 JUNE 1992 / 8 FEB 1993
SHEET 1 OF 1

APPENDIX B: SAFETY EVALUATION AND SAFETY TEST PROCEDURE

(from Pulsed X-Ray Facility System Safety Analysis)

D. Evaluation:

1. Radiation exposure protection:
   a). Safety systems:
      1). Fully enclosed system.
      The x-ray tube and the x-rays are enclosed in a steel box with 1/4" thick walls. Any access to the interior of the box while the x-ray tube is operating is precluded by interlocks.
      2). Limited x-ray energy.
      The x-rays are limited to 40 kV by the capabilities of the high-voltage power supply.
      3). Adjustable current trip switch.
      The high voltage power supply includes a current trip switch, which is set below the 50 uA maximum current rating of the x-ray tube. This switch will shut down the power supply if the current to the tube exceeds the set level. This limits the level of x-ray radiation which can be produced.
      4). Interlocked area monitor.
      A large plastic ionization chamber above the facility constantly monitors the area for radiation. It is incorporated into the interlock chain. If significant levels of radiation are detected, the monitor will sound an audible alarm and will shut down the x-ray system.
      5). Interlocked "X-RAY ON" light.
      If the light bulb in the "X-RAY ON" light fails, the x-ray system will shut down and will not restart until the bulb has been replaced. (A test switch is used to test this feature.)
      6). Redundant interlocks.
      The entire interlock chain controls the high voltage power supply through two independent interlock connections, one of which is a mechanical relay in the AC power input of the high voltage power supply. (These two interlocks can be independently tested to ensure redundancy.)
      7). Panic switch.
      A red panic switch is prominently mounted on the table top in front of the x-ray tube housing. This switch will disable the x-ray system.
      8). Power interrupt protection
      If the power to the x-ray facility is interrupted, the system will not resume high voltage production until manually restarted.
   b). Safety management:
      1). Only authorized users, trained by an authorized instructor, may use this facility.
      2). Access to high voltage requires an high-voltage enable key which is available from the system supervisor or his designate.
      3). The interlock system is equipped with indicator lights which identify the location of a break in the interlock chain.
      4). Signs warning of radiation hazard are posted at the room entrance and near the facility.
      5). A red light illuminates an "X-RAY ON" sign above the facility if (and only if) high voltage is applied to the x-ray tube.
      6). All personnel operating the x-ray facility must wear dosimetry badges.
      7). Copies of the OSP and this SSA are located near the facility in room 55-200.

2. High voltage safety:
   a). Safety systems:
      1). Interlocked high voltage access.
      Before accessing any high voltage areas, two levels of guards must be removed, the first of which includes an interlock switch. This system ensures that any dangerous voltages will have decayed to safe levels before human contact.
      2). < 5 J of stored electrical energy.
      According to the manufacturer of the high voltage power supply (Gamma High Voltage), the power supply and its cable store less than the potentially lethal dose of 5 J of electrical energy. The measured capacitance of the power supply, the cable, and the tube is 4.13 nF, for a stored energy value (.5 C V^2) of 3.3 J at 40 kV and 1.86 J at 30 kV.
   b). Safety management:

1). A braided grounding cable is connected between the high voltage power supply and the x-ray tube housing. This is a redundant grounding connection which is highly visible when the high voltage cable is removed.
2). Two current meters and a voltage meter are incorporated into the system. One of the current meters and the voltage meter are on the high voltage power supply. The other current meter is on the interlock/control panel.
3). Labels warning of high voltage hazards are posted in appropriate locations.

3. Laser safety
   a). Safety systems:
      1). Low-intensity laser.
      The laser used is a Class II laser. (Wavelength 650 nm, peak power 100 mW, pulse duration 100 ps FWHM, max. repetition rate 10 MHz. Max. average power 100 μW.) The only necessary precaution is to avoid staring directly into the beam.
   b). Safety management:
      1). The power supply for the laser is controlled by a key.
      2). Labels indicating caution are posted in appropriate locations.

F. Testing protocol checklist:

For pulsed x-ray facility in bldg. 55, rm. 200. Six month period. Steve Derenzo (x4097), system supervisor.

INITIALS	ACTION
1. _____	If in any of the following steps this facility fails to act as expected, shut down the system, record any observations in the system log book, notify one of the system maintenance personnel, and proceed to section G.
2. _____	With the high voltage power supply off, measure the resistance across each of the two BNC connectors on the right side of the x-ray tube housing. Confirm that both yield resistances of 10 kohms. (If either one measures 26.1 or 16.2 kohms, then a resistor has failed or come loose.)
3. _____	Obtain the high voltage power key from the system supervisor or his designate. Take note of the dial setting for the voltage dial on the high voltage power supply, then set the dial to 1.0, which corresponds to 4 kV. Turn on the high voltage power. Confirm that the red "INTERLOCK OPEN" light on the high voltage power supply is on. Leave the light pulser off.
4. _____	Remove the DC fuse from the front lower right of the "Pulsed X-ray Control Panel." Confirm that the green light which is labeled "DC fuse" turns off when the fuse is removed. Replace the fuse and confirm that the green light turns on.
5. _____	With the sample chamber at atmospheric pressure, confirm that the green light labeled "Vacuum switch 1" is off.
6. _____	Exchange the order of the two vacuum switches by exchanging the two circular connectors which are mounted on the left side of the center post of the control rack, above the vacuum control panel. Confirm that the "Vacuum switch 1" light remains off.
7. _____	Evacuate the sample chamber and confirm that both the "Vacuum switch 1" light and the "Vacuum switch 2" light turn on.
8. _____	Confirm that the "L.E.R.M." light is on. Then position a low-level radiation source near the ionization chamber of the low energy radiation monitor. Confirm that this triggers an alarm and turns off the "L.E.R.M." light. Wait for the L.E.R.M. to reset, and confirm that the green "L.E.R.M." light on the control panel comes back on.
9. _____	Remove the aluminum guard from the back access panel of the x-ray tube housing. Confirm that the "Tube access panel" light turns off. Attach the guard and confirm that the green light turns on.
10. _____	Remove the outermost aluminum guard on the high voltage connection at the bottom of the x-ray tube housing. Confirm that the "HV connection to tube" light turns off. Attach the guard and confirm that the light turns on.
11. _____	Remove the aluminum guard from the top of the laser diode housing. Confirm that the "PLP diode access" light turns off. Attach the guard and confirm that the light turns on.

12. _____ Loosen the quick-flange ring at the connection between the laser diode housing and the x-ray tube housing until the microswitch opens. Confirm that the "Light entrance" light turns off. Tighten the quick flange ring and confirm that the "Light entrance" light turns on.

13. _____ Loosen the quick-flange ring on the tube extending from the side of the x-ray tube housing until the microswitch opens. Confirm that the "Vacuum to tube" light turns off. Tighten the quick flange ring and confirm that the light turns on.

14. _____ Press the red panic switch on the table top (in the front left corner) and confirm that the "Panic switch" light turns off.

15. _____ Visually inspect the facility to ensure that it is safe for x-ray generation. With the panic switch still depressed, press and hold the "X-RAY ON" button. Confirm that the "INTERLOCK OPEN" light on the high voltage power supply remains on and that the voltage meter remains at zero. Release the "X-RAY ON" button. Then turn the panic switch to release it and confirm that the "Panic switch" light turns on.

16. _____ Press and hold the "X-RAY OFF" button. Confirm that the "Off switch" light turns off. Release the button and confirm that the light turns on.

17. _____ Press the "X-RAY ON" button and confirm that the "INTERLOCK OPEN" light turns off and the voltage begins to rise. (If the V.O.L. light turns on to indicate that the current setting has been exceeded, press the "X-RAY OFF" button, wait 15 seconds, and try again. If this does not work, follow the instructions in step 1 above.)

18. _____ Press and hold the "Secondary interlock test" button. Confirm that the voltage reading on the high voltage power supply begins to drop. The "X-RAY ON" light above the facility should remain on. Release the button. (The inrush current will probably exceed the current trip setting on the current dial, causing the "V.O.L." light to turn on and the high voltage to turn off.)

19. _____ Press the "X-RAY OFF" button. Wait 15 seconds, then press the "X-RAY ON" button. Confirm that the voltage on the high voltage power supply begins to rise.

20. _____ Press the "Light bulb interlock test" button. Confirm that the "INTERLOCK OPEN" light turns on and the high voltage decreases.

21. _____ Wait 15 seconds, press the "X-RAY ON" button, and confirm that all lights and meters appear to be operating properly.

22. _____ Slowly return the voltage dial on the high voltage power supply to its setting from prior to this test procedure. Confirm that the voltage rises to the desired value.

23. _____ Press the "X-RAY OFF" button and confirm that the "INTERLOCK OPEN" light turns on. Turn off the key switch on the high voltage power supply and return the key to its proper place.

24. _____ Record this test procedure and any observations in the facility log book.

25. _____ Fill out section G, sign and date this form (consisting of sections F and G of the SSA), and then mail the form to the X-Ray Safety Officer.

G. Conditions requiring service or repair notes:

APPENDIX C: DESIGN OF SAMPLE CHAMBER AND X-RAY TUBE HOUSING

Perspective Drawing

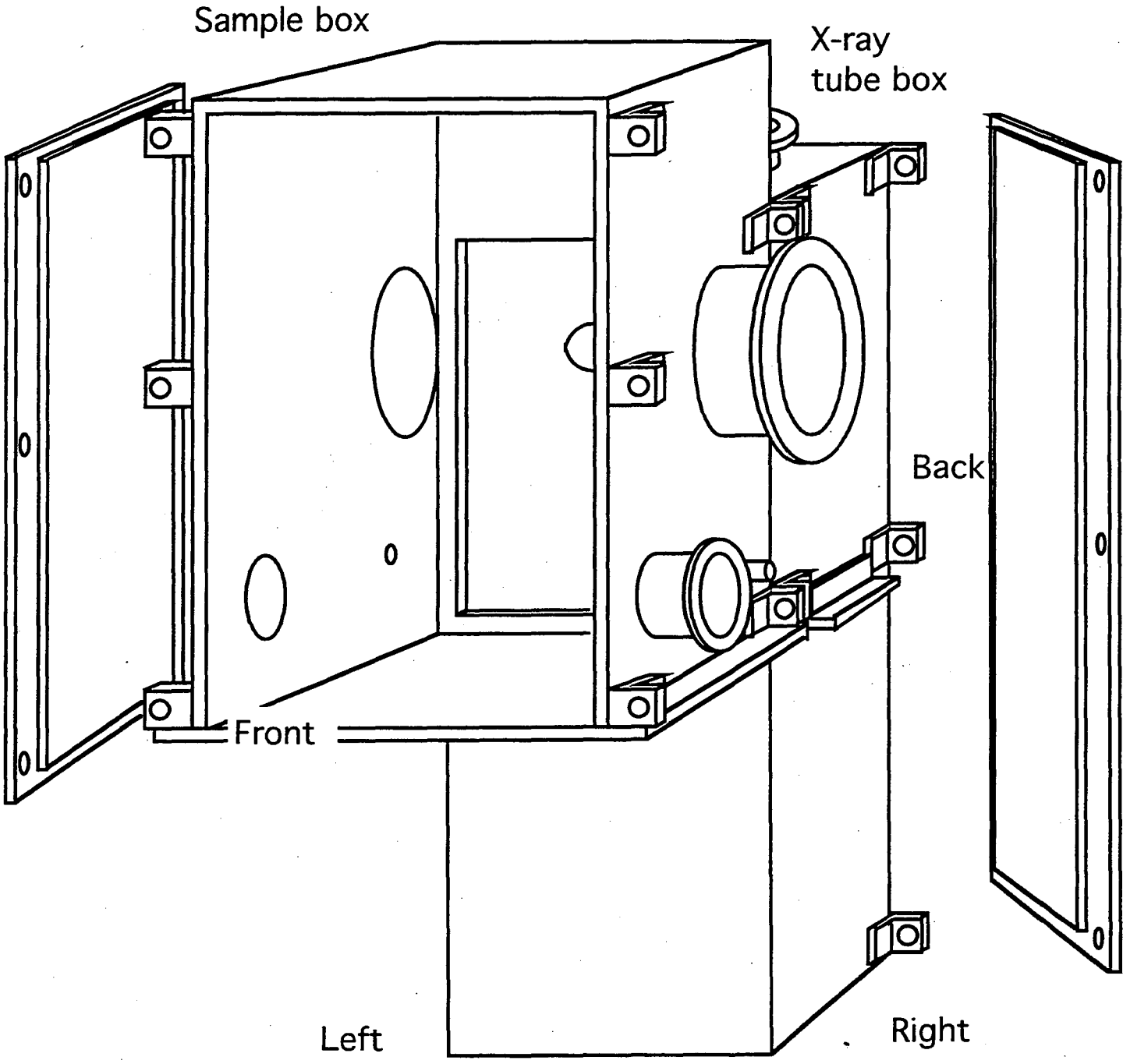

NOTE: This drawing (this page) is NOT to scale and is NOT proportioned correctly.

NOTE: Tabs connecting the boxes should have clearance for 1/4-20. The tabs on the front of the sample box and the back of the tube box must be tapped for 1/4-20.

LBL
Pulsed X-ray facility:
Housing
Dwg. #73X0105, mod.
Steve Blankespoor
7/92 (12/93)

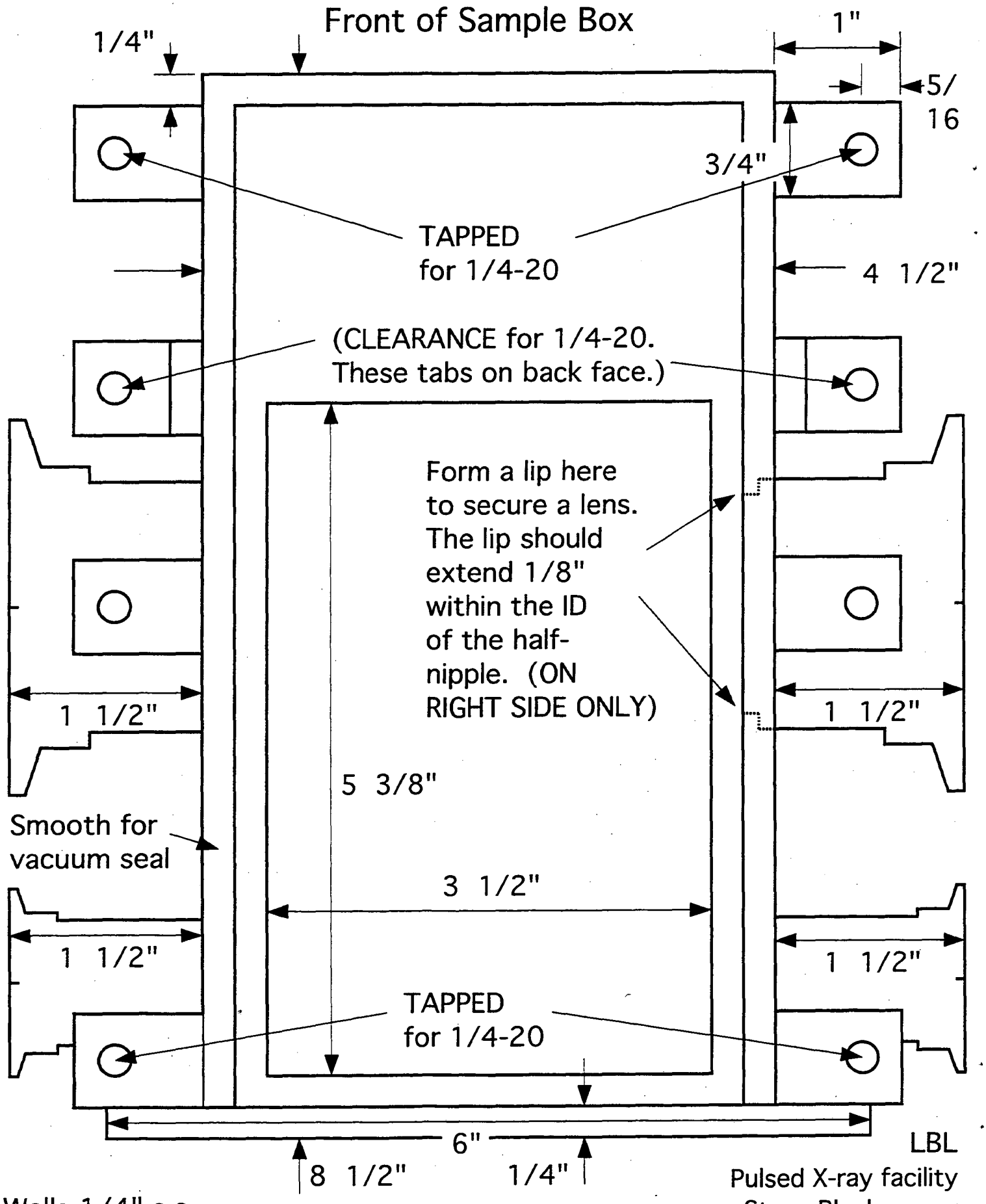

Walls 1/4" s.s.
Tabs 1/4 x 1 x 1 by 3/4"-long s.s. angle.

LBL
Pulsed X-ray facility
Steve Blankespoor
1:1 scale 7/92

Left Side of Sample Box

Right side mirror image of left.

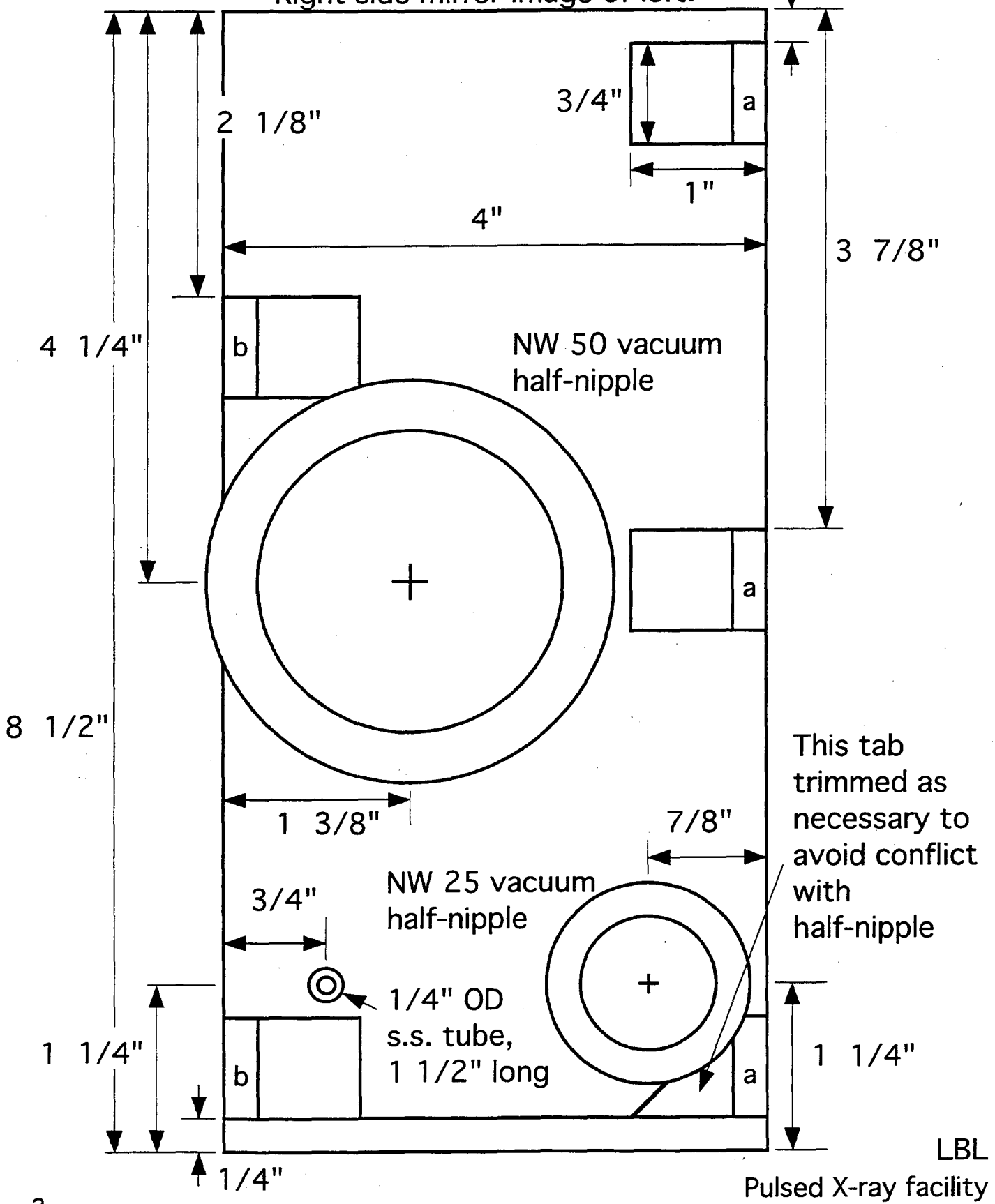

LBL
Pulsed X-ray facility
Steve Blankespoor
1:1 scale 7/92

[a] Holes in these tabs: TAPPED for 1/4-20
[b] Holes in these tabs: CLEARANCE for 1/4-20

Sample Box Door

(Tube access panel similar.)

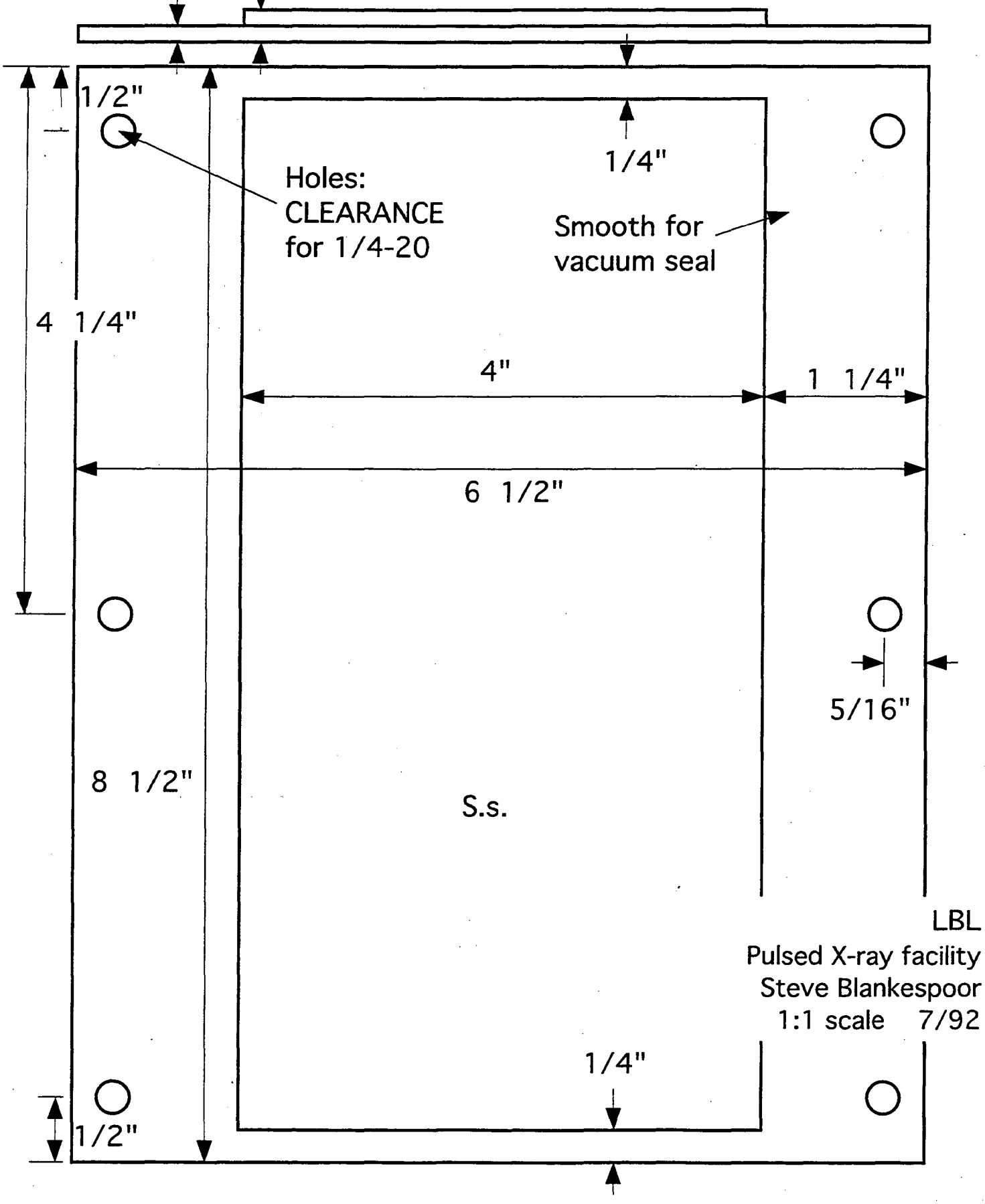

Back of Tube Box

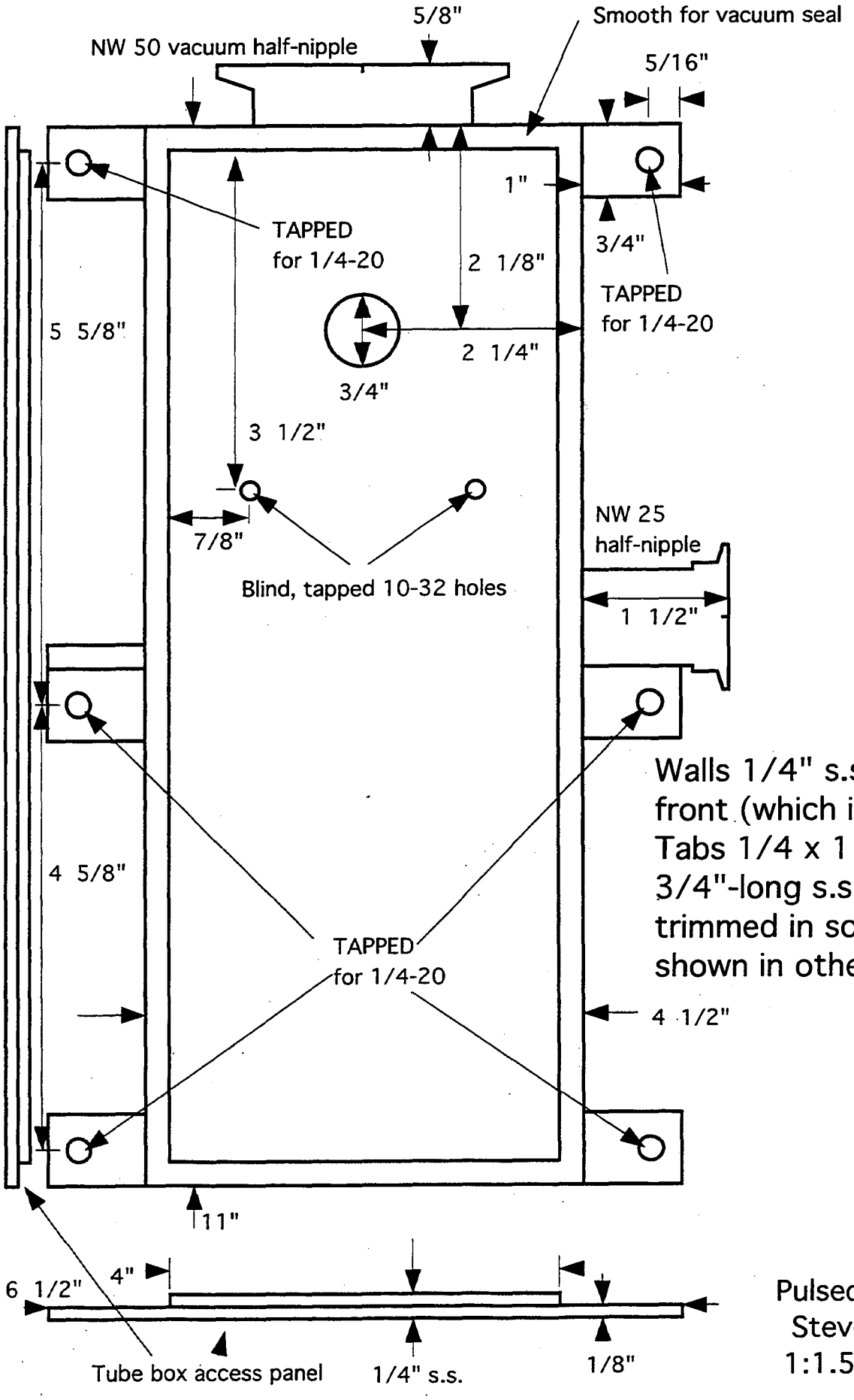

Walls 1/4" s.s., except front (which is 3/8"). Tabs 1/4 x 1 x 1 by 3/4"-long s.s. angle, trimmed in some cases as shown in other drawings.

LBL
Pulsed X-ray facility
Steve Blankespoor
1:1.5 scale 7/92

Left Side of Tube Box

Right side mirror image of left side EXCEPT without the vacuum half-nipple

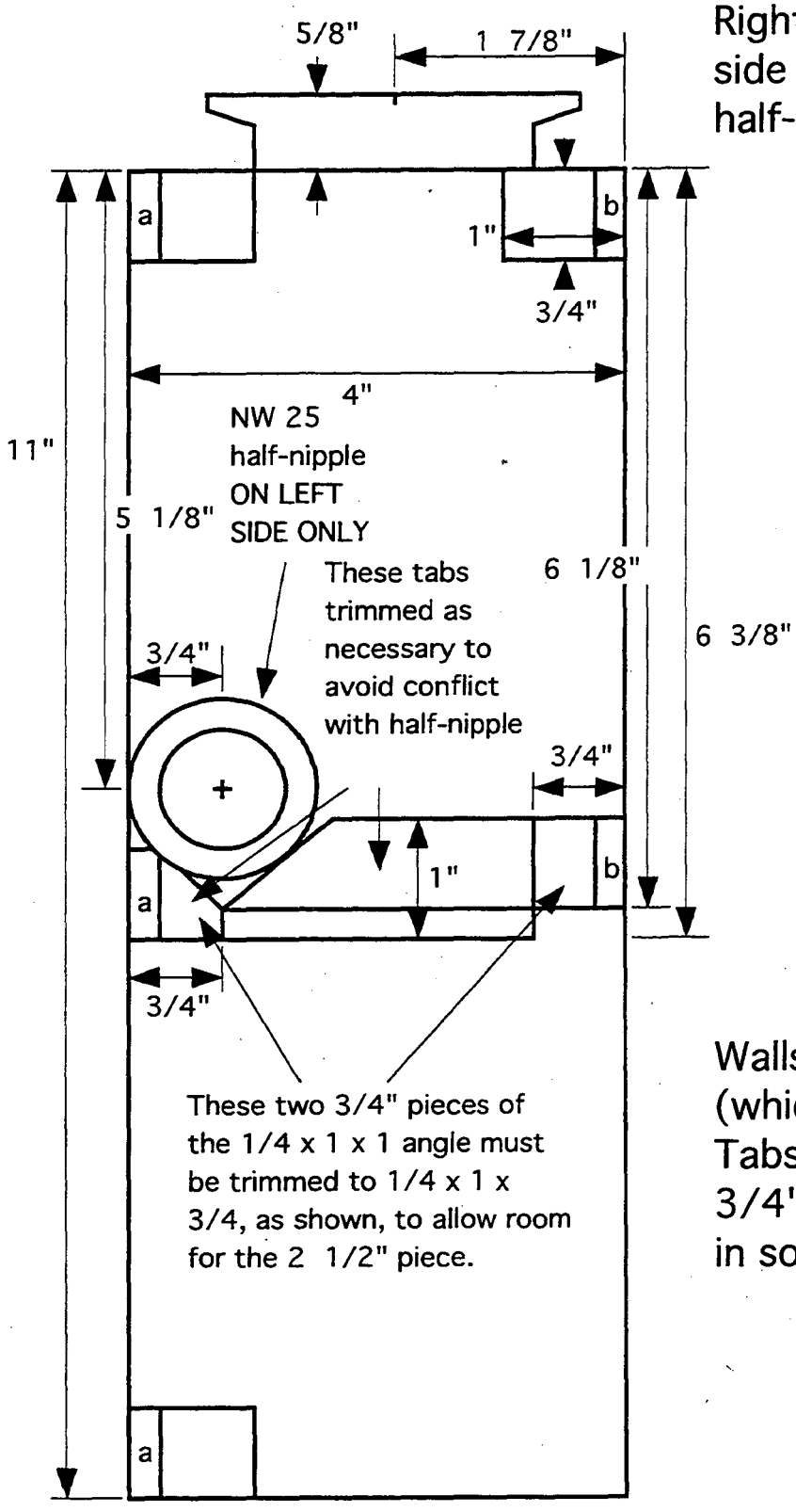

Walls 1/4" s.s., except front (which is 3/8").
Tabs 1/4 x 1 x 1 by 3/4"-long s.s. angle, trimmed in some cases as shown.

[a] Holes in these tabs: TAPPED for 1/4-20
[b] Holes in these tabs: CLEARANCE for 1/4-20

LBL
Pulsed X-ray facility
Steve Blankespoor
1:1.5 scale 7/92

Front of Tube Box

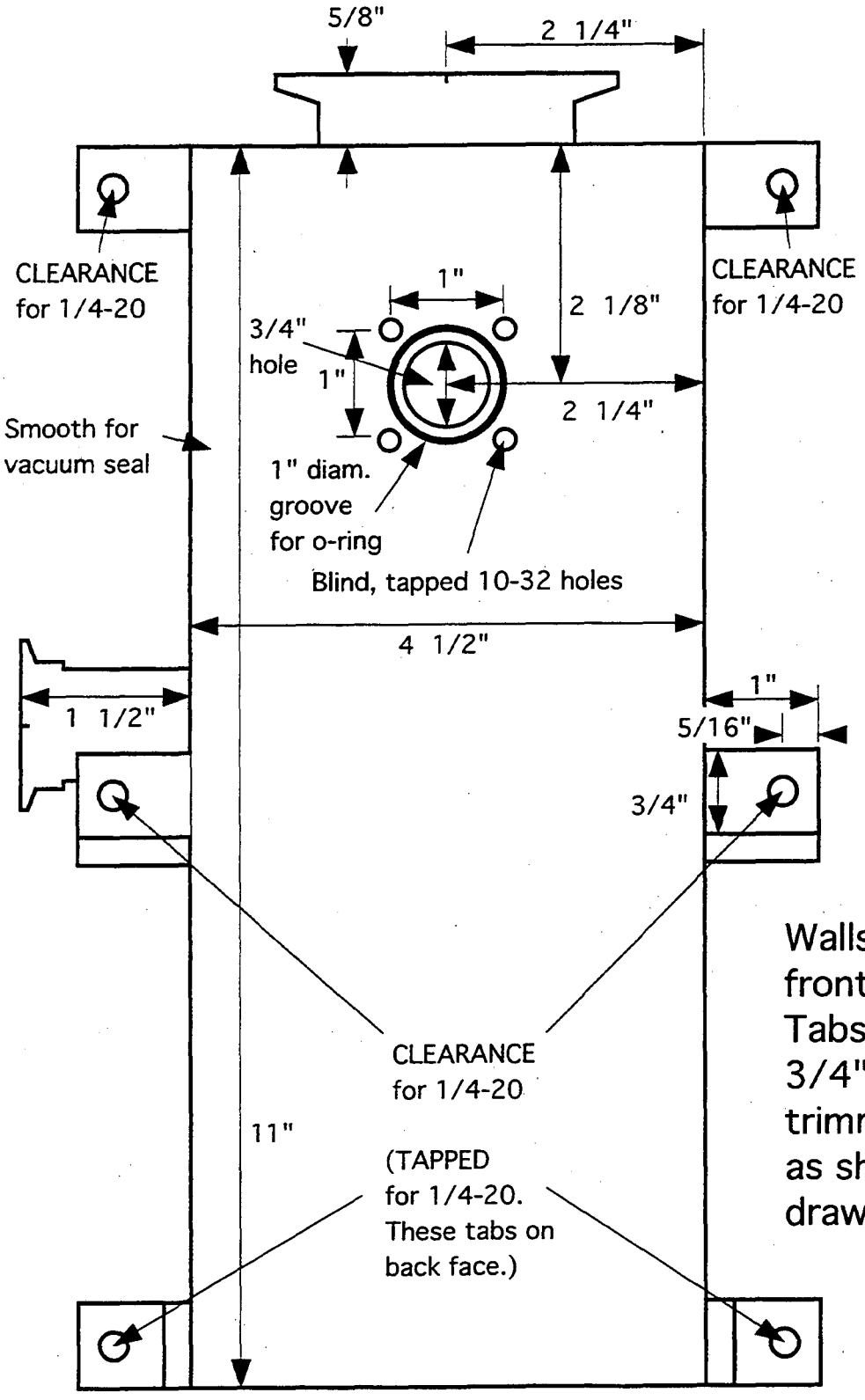

Walls 1/4" s.s., except front (which is 3/8"). Tabs 1/4 x 1 x 1 by 3/4"-long s.s. angle, trimmed in some cases as shown in other drawings.

LBL
Pulsed X-ray facility
Steve Blankespoor
1:1.5 scale 7/92

APPENDIX D: OPERATING PROCEDURE

PROCEDURES FOR MEASURING FLUORESCENT DECAY TIME SPECTRA OF POWDERED SAMPLES USING THE PULSED X-RAY FACILITY

(Dr. Stephen Derenzo)

PURPOSE

The purpose of these procedures is to expose powdered samples to brief pulses of x-rays and to measure the time distribution of the resulting fluorescent emissions.

PRINCIPLE OF OPERATION

The laser diode controller produces periodic timing pulses (the "start" pulses) and the necessary signals to drive the laser diode head. The laser diode produces 100 ps pulses of red light (650 nm) that are focused onto the photocathode of a special "light excited x-ray tube." Photoelectrons emitted into the vacuum within the tube are accelerated through a potential of 30 kV to a tungsten anode where they produce x-rays. Some of these x-rays exit the beryllium window of the x-ray tube. An additional aluminum window separates the x-ray tube box from the sample chamber. X-rays striking the sample produce fluorescent photons that are focused by a quartz-lens telescope onto the photocathode of a microchannel phototube capable of detecting single photons in the 160-600 nm range with a time resolution of 50 ps. The output of the microchannel phototube is sent to a 10X amplifier with a bandwidth of 2.1 GHz and then to a discriminator that produces a "stop" pulse. This discriminator has been specially modified to handle the fast pulses produced by microchannel phototubes.

In one mode, a "tac" (time to analog converter) converts the start and stop pulses into analog pulses, whose height is proportional to the time difference between the start and stop pulses. The analog pulses are sent to a pulse height analyzer where they are classified according to pulse height and accumulated in histogrammer memory. In this mode, the laser diode is run at a maximum rate of 200 kHz because it is difficult for the tac to handle start pulses at a higher rate. The time range for this mode is 8000 channels x 10.5 ps per channel ≈ 80 ns, and the timing resolution is about 100 ps full width at half maximum (fwhm). In a separate operation, the time bins are "compressed" to produce a more compact data set with about 830 channels.

In another mode, a "tdc" (time to digital converter) uses the start and stop pulses to produce a number proportional to the time difference between the start and stop pulses. These numbers are accumulated in histogrammer memory. With a laser diode rate of 200 kHz, the pulses are separated by 5000 ns and the practical data range is 4000 ns. The time channels near zero are 78 ps wide and data compression is accomplished "on the fly" to produce a data set of about 1200 channels. The timing resolution in this mode is about 300 ps fwhm.

In the compression algorithm, the 500 time channels near zero are kept separate, but for times earlier or later, the channel contents of 2^N neighboring channels are combined into one channel, where N increases progressively as the time difference from zero increases.

SAMPLE PREPARATION

Place approximately 2g of sample into a special quartz NMR tube and seal the top with the small plastic cap. The quartz vial should be 1/2 to 3/4 full. Write the sample number on the top of the small cap. For storage, place the sealed quartz vial in a larger plastic tube with cap. Apply an adhesive label to the outside of the larger tube and write the sample number and description on the label.

NORMAL STARTUP AND FIRST SAMPLE PROCEDURE

The following steps assume that everything is off.

1 Place the desired sample in the sample chamber and torque the 6 bolts on the front plate.

2 Get the high voltage interlock key from its hiding place, insert the key, and turn clockwise. (Only the first green x-ray tube high voltage interlock light should come on.)

3 Throw valve "1" clockwise to disconnect the sample chamber from room air.

4 Throw valve "2" counterclockwise to connect the sample chamber to the vacuum pump.

5 Turn on switch "3" to start the vacuum pump. (After a minute or so, all green x-ray tube high voltage interlock lights should come on.)

6 Connect the phototube high voltage cable that runs in front of the sample chamber.

7 Turn on the switch on the front panel of the phototube power supply (the red panel light should come on), and then turn the 500 V per step knob full clockwise. The red light on the front of the phototube discriminator should be blinking about once per second. (If it is on steady, there is a light leak, and if it stays dark, something is wrong.)

8 Turn the 100 V per step knob full clockwise. (The panel indicator should read -2.99 or -3.00 kV.)

9 Press the x-ray tube high voltage on button. (The x-ray on light on the top of the pipe should light.)

10 Start the application "LabView" on the Macintosh.

11 Take data using either the "PHA histogramming" panel (tac mode) or the "tdc histogramming" panel (tdc mode).

12 When the necessary amount of data has been taken (> 1 million counts above dark current background), store the file using the scheme (sample number).(YYMMDD).tac or (sample number).(YYMMDD).tdc. For sample number 123 taken on February 10, 1994, in tac mode, the file name would be 123.940210.tac. Using this file naming convention, the computer will naturally list the file names first by sample number, then by date.

13 Compress the file using "Compress existing data". Use 0.0105 ns/bin (the default) and 2500 as the zero bin. The resulting file should be named (sample number).(YYMMDD).tac.dat.

SAMPLE CHANGING AND DATA TAKING PROCEDURE

The following steps assume that the "NORMAL STARTUP AND FIRST SAMPLE PROCEDURE" has been done.

1 Turn down the phototube high voltage, first by turning the 100 V per step knob counterclockwise to zero, then by turning the 500 V per step knob counterclockwise to zero.

2 Turn off the phototube high voltage power supply switch on the front of the panel. (The red light on he front panel should go out.)

3 Unplug the high voltage cable that runs upward in front of the sample chamber.

4 Press the x-ray tube high voltage button off. (The x-ray on light at the top of the pipe should go out.)

5 Throw valve "a" clockwise to disconnect the sample chamber from the vacuum pump.

6 Throw valve "c" counterclockwise to vent the sample chamber to air.

7 Remove the 6 bolts on the front of the sample chamber. (At this point the phototube high voltage must be turned off (steps 1-3) or the tube will be damaged.)

8 Remove the old quartz vial from the brass sample holder and place it in its labeled vial.

9 Insert the new quartz vial in the sample holder

10 Replace the six bolts on the front of the sample chamber and torque them.

11 Throw valve "1" clockwise to disconnect the sample chamber from room air.

12 Throw valve "2" counterclockwise to connect the sample chamber to the vacuum pump. (After a few seconds, all green x-ray tube high voltage interlock lights should come on.)

13 Reconnect the high voltage cable that runs in front of the sample chamber.

14 Turn on the switch on the front panel of the phototube power supply (the red panel light should come on), and then turn the 500 V per step knob full clockwise. The red light on the front of the phototube discriminator should be blinking about once per second. (If it is on steady, there is a light leak, and if it stays dark, something is wrong.)

15 Turn the 100 V per step knob full clockwise. (The panel indicator should read -2.99 or -3.00 kV.)

16 Press the x-ray tube high voltage on button.

17 Take data using either the "PHA histogramming" panel (tac mode) or the "tdc histogramming" panel (tdc mode).

18 When the necessary amount of data have been taken (> 1 million counts above dark current background), store the file using the scheme (sample number).(YYMMDD).tac or (sample number).(YYMMDD).tdc. For sample number 123 taken on February 10, 1994 in tac mode, the file name would be 123.940210.tac. Using this file naming convention, the computer will naturally list the file names first by sample number, then by date.

19 Compress the file using "Compress existing data". Use 0.0105 ns/bin (the default) and 2500 as the zero bin. The resulting file should be named (sample number).(YYMMDD).tac.dat.

EMERGENCY SHUTDOWN

Press the large red panic button on the front of the cart. This immediately stops x-ray production. (If desired, continue with the "NORMAL SHUTDOWN" below.)

NORMAL SHUTDOWN

1 Turn down the phototube high voltage, first by turning the 100 V per step knob counterclockwise to zero, then by turning the 500 V per step knob counterclockwise to zero.

2 Turn off the phototube high voltage power supply switch on the front of the panel. (The red light on the front panel should go out.)

3 Unplug the high voltage cable that runs upward in front of the sample chamber.

4 Press the x-ray tube high voltage button off. (The x-ray on light at the top of the pipe should go out.)

5 Throw valve "a" clockwise to disconnect the sample chamber from the vacuum pump.

6 Turn off switch "b" to turn off the vacuum pump.

7 Throw valve "c" counterclockwise to vent the sample chamber to air.

8 Turn off the laser diode and remove the key (OK to let the key hang in front of the laser diode controller.)

9 Remove the x-ray tube high voltage interlock key and put it in its hiding place.

LAWRENCE BERKELEY LABORATORY
UNIVERSITY OF CALIFORNIA
TECHNICAL INFORMATION DEPARTMENT
BERKELEY, CALIFORNIA 94720

AAS274
LBL Libraries