LBL-35253
UC-350

Lawrence Berkeley Laboratory

UNIVERSITY OF CALIFORNIA

ENERGY & ENVIRONMENT DIVISION

Presented at the IEEE Annual Conference, Toronto, Canada, October 4–8, 1993, and to be published in the Proceedings

Developing Practical Reflectors for Cylindrical and Compact Fluorescent Lamps Based on Nonimaging Optics

M. Packer and F. Rubinstein

August 1993

ENERGY & ENVIRONMENT DIVISION

REFERENCE COPY
Does Not
Circulate
Bldg. 50 Library.
LBL-35253
Copy 1

Prepared for the U.S. Department of Energy under Contract Number DE-AC03-76SF00098

DISCLAIMER

This document was prepared as an account of work sponsored by the United States Government. While this document is believed to contain correct information, neither the United States Government nor any agency thereof, nor the Regents of the University of California, nor any of their employees, makes any warranty, express or implied, or assumes any legal responsibility for the accuracy, completeness, or usefulness of any information, apparatus, product, or process disclosed, or represents that its use would not infringe privately owned rights. Reference herein to any specific commercial product, process, or service by its trade name, trademark, manufacturer, or otherwise, does not necessarily constitute or imply its endorsement, recommendation, or favoring by the United States Government or any agency thereof, or the Regents of the University of California. The views and opinions of authors expressed herein do not necessarily state or reflect those of the United States Government or any agency thereof or the Regents of the University of California.

Presented at the IEEE Conference
Toronto, Canada, 4-8 Oct 1993

L-171
LBL-35253
UC-350

DEVELOPING PRACTICAL REFLECTORS FOR CYLINDRICAL AND COMPACT FLUORESCENT LAMPS BASED ON NONIMAGING OPTICS

Michael Packer and Francis Rubinstein

Lighting Research Group
Energy and Environment Division
Lawrence Berkeley Laboratory
Berkeley, California 94720

August 1993

Acknowledgement

This work was supported by the Assistant Secretary for Energy Efficiency and Renewable Energy, Office of Building Technologies, Building Equipment Division of the U.S. Department of Energy under Contract No. DE-ACO3-76SFOOO98.

Developing Practical Reflectors for Cylindrical and Compact Fluorescent Lamps Based on Nonimaging Optics

Michael Packer and Francis Rubinstein
Lighting Research Group
Lawrence Berkeley Laboratory
Berkeley, CA 94720

Abstract- This paper investigates the application of nonimaging concentrators to the design of reflectors for luminaires. An interpretation of the concentration ratio -- a statement of the conservation of flux -- relative to the properties of a source and reflector is given. The result is used to develop practical compound parabolic (CP) reflector geometries that accommodate modern lamps. For the cylindrical and compact fluorescent lamps, we use the concentration ratio to show how the size and output performance of the CP reflector can be improved relative to the luminous and geometric properties of the lamp. The paper concludes by considering the addition of a nonimaging louver as a potentially significant design step once the reflector has been suitably designed relative to the lamp. It is noted that accurate data on the luminous emitting properties of lamps is a prerequisite to the development of optimum compact reflector designs.

I. INTRODUCTION

Reflector profiles based on nonimaging optics have been previously applied to the design of reflectors for lighting [1][2]. The reflectors are commonly known as compound parabolic concentrators (CPCs) and were originally considered for light collection. Prior research has generally characterized the efficiency and output distribution of these reflectors for simply curved diffuse sources [2][3]. However the studies generally lack an adequate interpretation of the expressions involved (which are stated in terms useful for solar collection) in terms appropriate for lighting. This rendition is important if practical lighting fixtures based on nonimaging concepts are to be developed that fully realize their energy saving potential. In this paper we give an interpretation of the concentration ratio with respect to the properties of a lamp and reflector. We then present some reflector profiles generated from the application of the concentration ratio and the edge ray method to modern full-size and compact fluorescent lamp systems. The paper concludes by citing additional methods based on nonimaging optics that can be undertaken to develop more useful and efficient reflector systems.

II. INTERPRETATION OF THE CONCENTRATION RATIO

The concentration ratio has been derived in [1] and used with the edge-ray method to develop CPC reflectors for lighting similar to those shown in Fig. 1 and Fig. 3. The concentration ratio is a statement of the conservation of luminous flux and can be written in the following form:

$$\begin{aligned} \text{2D:}\quad & A_s \sin\theta_s = A_r \sin\theta_r \\ \text{3D:}\quad & A_s \sin^2\theta_s = A_r \sin^2\theta_r \end{aligned} \qquad (1)$$

Light leaving any point on a surface area As within an angular cone defined by θs can exit a given aperture area Ar within an angular cone θr provided (1) is satisfied for two and three dimensions respectively.

Fig. 1 illustrates this transfer of flux for light leaving a flat source and exiting a reflector aperture.

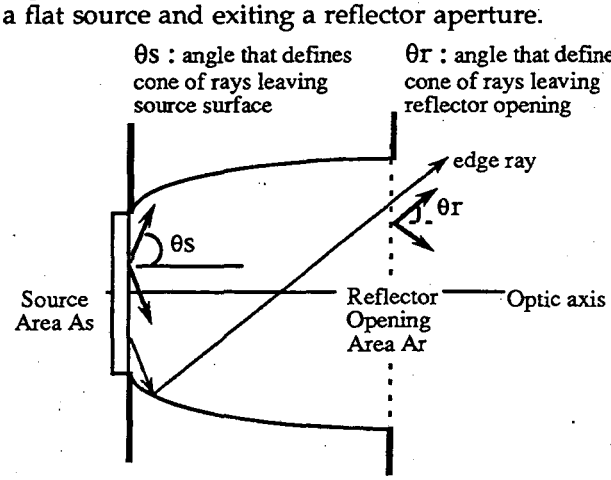

Fig. 1. Flux that leaves any point on a source area A_s within an angle θ_s can fully exit a reflector area A_r at an angle θ_r or less provided (1) is satisfied.

The edge ray method of reflector design examines rays that leave the source exactly at the maximum angle θ_S, reflect off the reflector once, and exit the reflector at the angle θ_r. Tracing a family of edge rays (each with a different starting point on the source) uniquely determines the reflector profile and ensures that rays emitted from the source with angles less than θ_S will exit the reflector (Fig. 1).

For a diffusely emitting source such as a fluorescent lamp, θ_S is often taken as $\pi/2$. θ_r gives the maximum angular extent of a cone of rays leaving a point in the aperture. θ_r is also the "cutoff" angle of the reflector as it is the maximum angle relative to the optic axis of the reflector that light emitted from the source can be seen.

The expressions in (1) provide useful information for reflector-lamp systems that operate near this optic limit. For instance, if we specify the cutoff angle θ_r for a reflector design and specify the lamp to be used (which determines A_S and θ_S), then (1) yields the minimum aperture area (and diameter) the reflector must have if all rays emitted from the lamp are to exit the system within the desired angular range. Alternatively, if the aperture area of the CPC reflector is specified along with the type of lamp, then one can determine the smallest cutoff angle the optical system could effectively have without trapping rays inside the reflector.

Equation (1) also indicates an important relationship between a source's surface geometry and the luminous intensity distribution leaving a differential element on the source's surface in terms of reflector design. If the area-angle product for the reflector aperture decreases, then either the source area A_S or the source angle θ_S must decrease to conserve flux. For a spherical source with a fixed A_S, as θ_S approaches zero, rays will predominately leave the sphere normal to its surface. If those rays were traced back to an origin, it would appear as if the rays originated from a point or small surface area at the center of the sphere (Fig. 2a). On the other hand, if we started with a point like source with a large θ_S, then observing rays leaving a large "imaginary" sphere surrounding the small source would give the impression that the rays were being emitted from this large sphere but at a smaller angle θ_S (Fig. 2b). Thus, the justification for treating an extended object as a point source depends on the candlepower distribution of a surface element of the source being bounded within a tight cone about the surface normal or that the source

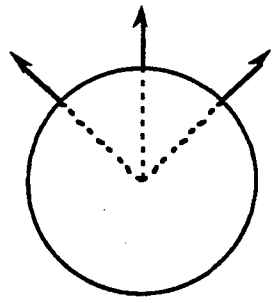

Rays leaving normally from source appear to originate from a point.

(A)

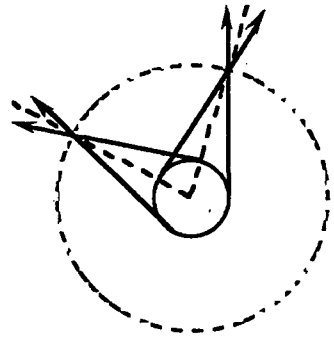

Rays leaving tangentially from a source appear to leave an enclosing sphere almost normal to its surface

(B)

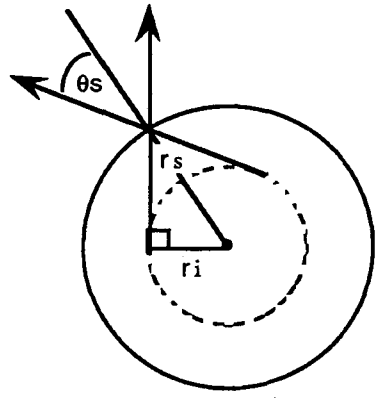

$r_i = r_s \sin\theta_s$

Geometrical relationship between a real and imaginary source. Rays leaving the real source within θs can be considered to have left the smaller imaginary source tangentially.

(C)

Fig. 2.

angle θ_s be much less than $\pi/2$. If one cannot adequately consider the flux from an extended source as emanating from a point (or a line for ellipsoidal source shapes) then perhaps it can be considered as originating from a smaller, but finite, imaginary source. This technique of using a smaller effective source may significantly reduce the reflector's width and length as indicated in (1) and the equations that describe CPCs profiles [4].

III. CPC REFLECTORS FOR THE CYLINDRICAL FLUORESCENT LAMP

The 2D CPC for a tubular source can actually approach the maximum light transfer implied in the conservation expression because of the high degree of symmetry of the lamp. However the length of the reflector, which is porportional to A_r/θ_r for progressively smaller cutoff angles, can become quite large and indeed approaches infinity for $\theta_r = 0°$. Therefore techniques must be considered to reduce its size to practical levels.

There are two methods to reduce the reflector size: truncation and minimizing the effective source size relative to the luminous and geometric characteristics of the actual lamp. Truncating the reflector at the aperture end is commonly used for solar energy collection because the economic benefits of reduced material costs overshadow the small losses in light collection. This trade-off is also relevant for lighting where smaller reflector size is critical even at the cost of small losses in task illumination or small increases in viewing angle. Hence the approach of shortening the reflector and using additional optical elements must eventually be addressed (see section V.)

But before truncation is undertaken, one should explore the possibility of minimizing the size of the reflector with respect to the emitting properties of the source. Though it will be seen that the reductions are slight for fluorescent systems with a large cutoff angle, they may help the reflector size to fall within the practical limits for luminaire design while maintaining the high light transfer efficiency of the ideal CPC. We illustrate this technique for a simple cylindrical fluorescent system.

If a reflector is specified to have a cutoff angle of 50° and house a T12 fluorescent lamp (which we assume for the moment has a $\theta_s = \pi/2$) then the dimensions of the resulting CPC single lamp reflector will be 4.7 in depth and a 6.2 in aperture (Fig. 3.) For luminaires intended for installation in restricted height ceiling plenums, these dimensions are generally too large to be practical. However for this reflector it was assumed that the value for θ_s is $\pi/2$ i.e. fluorescent lamps are assumed to have an intensity distribution which drops off with the cosine of the angle with respect to the surface normal. This distribution may or may not be correct. Nevertheless for the sake of argument if we assume this type of distribution and wish to model a reflector that insures sending rays with only the highest intensities out of the system within the specified cutoff angle, then we could consider using a smaller effective source. For example, at a θs of $\pi/3$ or 60° the ray intensity, normalized with respect to the maximum at $\theta s = 0°$, will have dropped to .5. Therefore if we specify $\theta s = \pi/3$ for our cone boundary then rays with intensities of .5 or higher will lie within this cone. As shown in Fig. 1c, rays that leave a circular source at angles less than $\pi/2$ are equivalent to rays leaving a smaller imaginary source at $\pi/2$. The radius of this imaginary source r_i is related to the radius of the true source by

$$r_i = r_s \sin\theta_s \qquad (2)$$

where r_s is the radius of the lamp (equal to .75 in for T12) and θ_s has its usual meaning. From this relation the imaginary source radius equals .65 in for the values given. Thus a CPC reflector modeled around a source with this "effective" lamp radius reduces the dimensions of the reflector to 4.1 in for the depth (Δ0.6 in) and 5.3 in for the aperture diameter (Δ0.8 in) (Fig. 3). Though this did not lower the dimensions of the reflector to within practical levels for this example, it shows roughly the magnitude of the reduction one can expect for this technique. For small cutoff angles (< 35 degrees), the reductions in reflector size are more substantial.

Of course, the use of a newer, more compact fluorescent source, if available, also reduces the reflectors dimensions. If we modeled this 50° CPC with a T8 lamp instead of a T12 and used $\theta s = \pi/2$, then the effective depth and aperture diameter would be 3.2 in and 4.1 in. If we used $\theta s = \pi/3$, the reflector depth and diameter would become 2.7 in and 3.6 in, respectively, (Fig. 3) which is well within practical luminaire dimensions.

IV. MODELING PRACTICAL CPCS AROUND COMPACT FLUORESCENT LAMPS

CPC reflectors can be developed for compact fluorescent lamps (CFLs) by substituting an enclosing two dimensional curve or three dimensional surface for

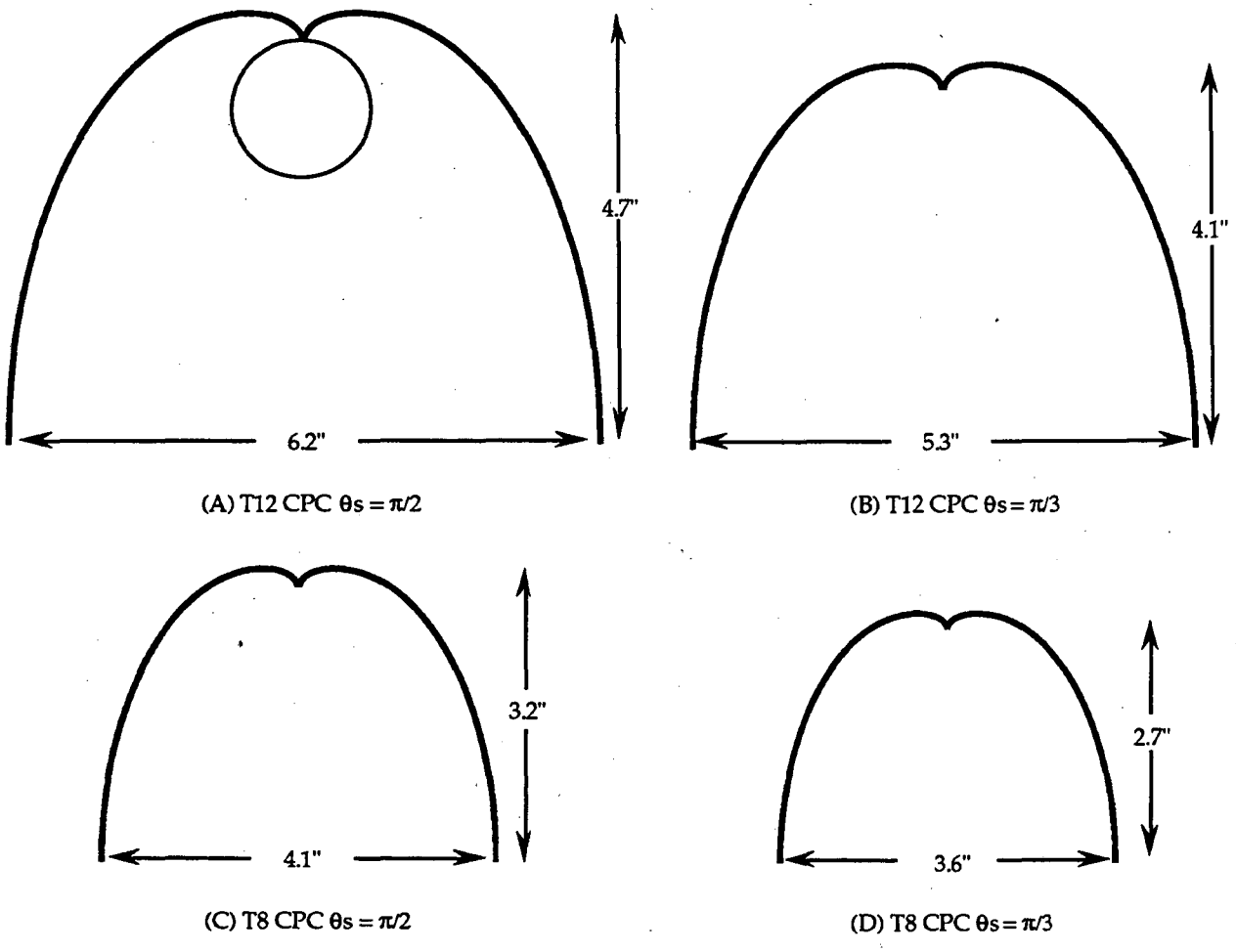

Fig. 3. CPC reflector profiles with cutoff angles of 50° for cylindrical fluorescents lamps of different size and values of θs.

the actual lamp shape and assigning a θ_S to these imaginary surfaces (see Fig. 4). The immediate advantage of using these surrogate surfaces rather than the actual complex lamp shape is that the CPC profiles generated for these surfaces can be written in closed form [4]. Moreover, we know from the previous section that all rays leaving the actual lamp surface can be considered to be emitted from the enclosing surrogate shapes at angles $\leq \pi/2$. As we will show presently, by judiciously selecting the surrogate surface, specific properties of the lamp and fixture (lamp non-uniformity and lamp positioning tolerances, for example) can be accommodated while simplifying the task of generating the actual reflector profile.

In some cases, a surrogate surface that encloses only part of the lamp may be used to model CFLs. For example, we have found that the luminance of a 13W twin tube CFL is not uniform along the lamp. At 1.5 cm from the base the luminance is 60% lower than at the center portion of the lamp where it is primarily uniform. As one approaches the base the light output rapidly drops to zero. Also, as the lamp is operated, filament blackening at the lamp base further reduces the contribution of this portion of the lamp to the total lamp flux.

In this section, rather than detailing the application of a smaller effective source, we extend our interpretation of (1) to determine mounting strategies

for CFLs within a reflector. These strategies can allow for errors in lamp positioning and improve the thermal performance of CFLs.

To illustrate this, we approximate the twin tube lamp shown in Fig. 4 with either a 2D cylindrical ellipse, or a 3D ellipsoid. The 2D geometry suggests orienting the lamp horizontally in a troffer and the 3D suggests mounting the lamp vertically in a spinner. Fig. 4 shows these reflectors for a cutoff angle of 50°. The depth of each reflector depends on the circumference or arc length of the curve used to approximate the lamp. Since the circumference of the

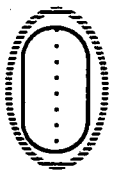

(A) Crossectional view of a cylindrical ellipse enclosing a twin tube CFL.

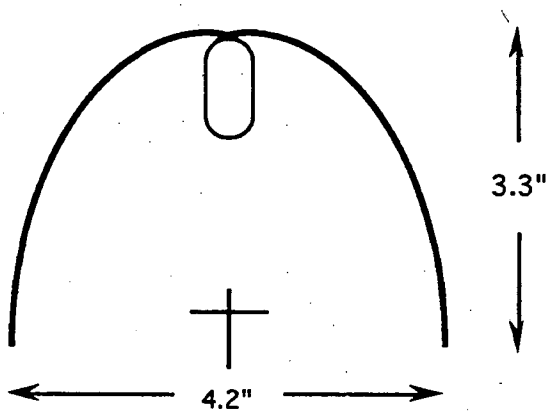

(C) Crossectional view of CPC reflector troffer for a twin tube CFL.

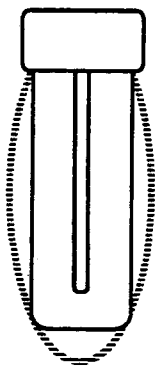

(B) Crossectional view of an ellipsiod enclosing a twin tube CFL.

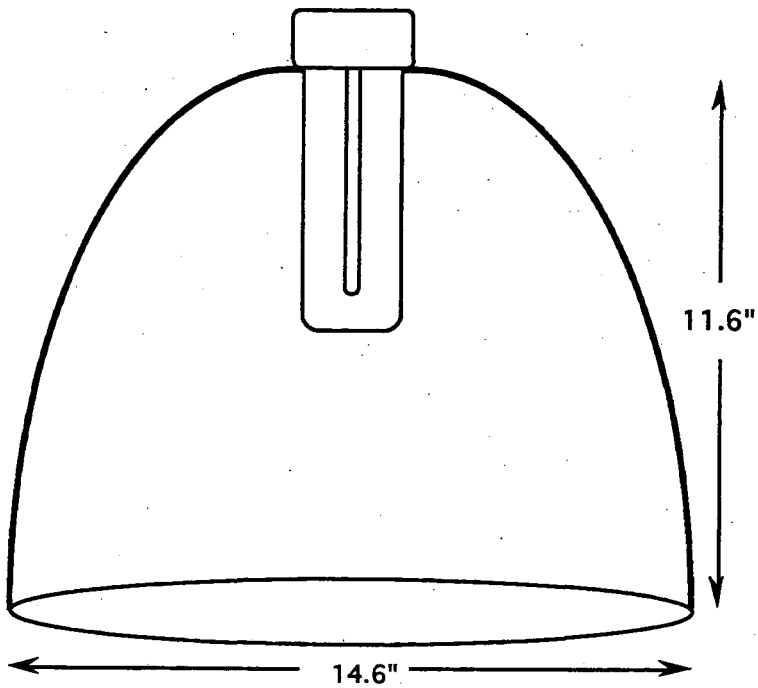

(D) Crossectional view of CPC reflector spinner for a twin tube CFL.

Fig. 4. Modeling a twin tube CFL reflector using a 2D cylindrical ellipse (A) and (C) and a 3D ellipsoid (B) and (D). The drawings approximate the relative shape of the reflectors for cutoff angles of 50° but are not to scale.

2D ellipse is smaller, the depth and relative diameter of the 2D system will be smaller than the 3D system for the same cutoff angle. For the cutoff angle used to design the reflectors shown in Fig. 4, it is seen that vertical mounting of the CFL results in a large and unwieldy shape but that with horizontal mounting, the resultant reflector is of a more practical size.

Once the CFL's orientation and CPC profile have been specified, then the system can be further improved by appropriately "fine-tuning" the shape of the surrogate source. By appropriately selecting the surrogate source geometry, irregularities due to manufacturing tolerances in actual lamp positioning within the reflector can be easily accommodated. Specifically, if we model the CPC around a slightly larger effective source area than the actual source, then placing the actual lamp anywhere within this area will still satisfy (1). This technique allows the luminaire designer to handle slightly off axis lamp positions while still ensuring that the maximum flux will be transferred out of the luminaire. Studies we have performed using effective sources that are 1/4 in larger in the radial direction than the true source indicate that the efficiency and distribution are maintained for lamp displacements within 1/4 in in any direction relative to the center axis.

Adjusting the shape of the surrogate source is also useful for accommodating slightly off-horizontal lamp orientation, which, according to previous studies, can be intentionally introduced to significantly improve the lamp's thermal performance. These studies have shown that the light output for Quad and Twin tube CFLs can be increased by 15% if the lamp base (where the filaments are located) is angled 3° or higher relative to the lamp tip [5]. This new lamp orientation, and the resultant thermal efficiency gains are easily handled by designing the CPC around a slightly larger effective source. If we stretch an effective source area to encompass a lamp positioned with its tip slightly down, then the system will satisfy (1) and have improved thermal performance. For a 13W twin tube lamp (Fig. 4a), this amounts to stretching the ellipse by 1/3 in to allow the lamp to be tilted 3°.

V. APPLICATION OF A NONIMAGING LOUVER

So far this paper has not discussed the output distributions of CPC reflectors. For 2D CPCs modeled around diffuse sources the distribution has been found to vary as the $\cos^3\theta$ where θ measures the angle between a point on a task plane located below and relative to the optic axis of the reflector [6]. Generally an even distribution across the plane is desired. Therefore an additional optical element may have to be considered. Also, we stated earlier in the paper that additional optical elements must be considered from the standpoint of reducing reflector length for narrow cutoff angles. At this point, in terms of nonimaging principles, one can break up the reflector opening into a sum of smaller areas and look at how each area contributes to the light distribution on the task plane. Ideally, from this analysis we can determine how each elemental area of flux might be redirected to give a desired distribution. In actuality we can redirect the light by introducing an additional degree of freedom into the design using a CPC louver as in Fig. 5. Each elemental reflector area may be related to a segment of the task (subscript t) as indicated. For this type of analysis, the angular relationship between the lamp and the reflector-louver opening should be reevaluated. A nonimaging prismatic lens could alternatively be considered [7].

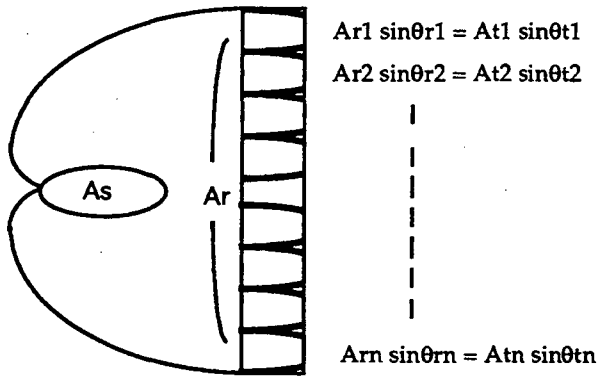

Fig. 5. CPC louver based on flux conservation. Each louver element may have its oun shape and orientation to meet geometric task requirements.

VI. ENDING STATEMENT

By elegantly relating important reflector characteristics such as the cutoff angle, depth and diameter to the fundamental attributes of source --. size, surface area, and luminous output-- the equations underlying nonimaging reflectors offer a useful first approach to luminaire design. Two major concerns with CPC reflectors are their large size and non uniform output distribution. However, with an adequate understanding of eq. (1), CPC reflectors for lighting can begin to be methodically improved in terms of their size and output while maintaining the high efficiency

inherent in the design. We have shown that by using thinner diameter (T8) fluorescent lamps, nonimaging reflectors can be designed that are significantly closer to practical size constraints for commercial luminaires than with the thicker diameter T12 lamps.

To effectively design a CFL reflector based on nonimaging optics, one must know the actual intensity distribution of a small source element as well as the relative output of this element with respect to the rest of the lamp. Once the luminous characteristics of the CFL are known, then a more exacting elliptical surface area can be applied around the lamp contour. This ellipse could be shortened to account for the characteristically low relative light output at the lamp base. At the same time, the ellipse could be widened to allow the reflector (designed relative to this ellipse) to tolerate slight positioning errors of the CFL within the reflector and optimize the thermal performance of the CFL relative to its orientation.

Although we have demonstrated several approaches for developing more practical reflectors, the methods were based on rather limited information of the actual luminous properties of fluorescent sources. For example, a simple calculation shows that the glass bulb's thickness and index of refraction will prevent light generated from the inner surface of a phosphored lamp from leaving the outer surface at high angles. If this calculation can be validated then it provides a physical justification for specifying a $\theta s < \pi/2$ for fluorescent lamps. Hence, for fluorescent lamps as well as other sources, detailed lamp data must be made available to develop luminaires that meet their full design potential.

ACKNOWLEDGEMENT

This work was supported by the Assistant Secretary for Energy Efficiency and Renewable Energy, Office of Building Technologies, Building Equipment Division of the U.S. Department of Energy under Contract No. DE-ACO3-76SFOOO98.

REFERENCES

[1] R. Winston, R. Holman, "Nonimaging Optics: Maximum Efficiency Light Transfer", SPIE Proceedings, San Diego, California, July 23 1991.

[2] W. Cai, J. Gordon, P. Kashin, and A. Rabl, "Reflectors for Efficient and Uniform Distribution of Radiation for Lighting and Infrared Based on Non-imaging Optics", SPIE Proceedings Vol. 1528, p. 118, 1991.

[3] J. M. Gordon, "Calculation of Flux Density Produced by CPC Reflectors on Distant Targets", SPIE Proceedings Vol. 1528, p. 152, 1991.

[4] W.T. Welford, R. Winston, "The Optics of Nonimaging Optics *Light and Solar Energy*", p. 190, Academic Press, New York, 1979.

[5] M. J. Siminovitch, F. M. Rubinstein, and M. Packer, "Fixture Efficiency Program", Proceedings of the Association of Energy Engineers Conference, Anaheim California, April 22, 1991.

[6] J. M. Gordon, "Calculation of Flux Density Produced by CPC Reflectors on Distant Targets", SPIE Proceedings Vol. 1528, p. 152, 1991.

[7] W. A. Parkyn and D. G. Pelka, "Compact Non-imaging Lens with Totally Internally Reflecting Facets", SPIE Proceedings Vol. 1528, p. 70, 1991.

LAWRENCE BERKELEY LABORATORY
UNIVERSITY OF CALIFORNIA
TECHNICAL INFORMATION DEPARTMENT
BERKELEY, CALIFORNIA 94720