LBL-35402
UC-350

Lawrence Berkeley Laboratory
UNIVERSITY OF CALIFORNIA

ENERGY & ENVIRONMENT DIVISION

Presented at the ACEEE 1992 Summer Study on Energy Efficiency in Buildings, Asilomar, CA, August 30, 1992, and to be published in the Proceedings

Improving the Thermal Performance of the U.S. Residential Window Stock

R.E. Brown, D.K. Arasteh, and J.H. Eto

May 1992

ENERGY & ENVIRONMENT DIVISION

LOAN COPY
Circulates
for 4 weeks
Bldg. 50 Library.
LBL-35402
Copy 2

Prepared for the U.S. Department of Energy under Contract Number DE-AC03-76SF00098

DISCLAIMER

This document was prepared as an account of work sponsored by the United States Government. While this document is believed to contain correct information, neither the United States Government nor any agency thereof, nor the Regents of the University of California, nor any of their employees, makes any warranty, express or implied, or assumes any legal responsibility for the accuracy, completeness, or usefulness of any information, apparatus, product, or process disclosed, or represents that its use would not infringe privately owned rights. Reference herein to any specific commercial product, process, or service by its trade name, trademark, manufacturer, or otherwise, does not necessarily constitute or imply its endorsement, recommendation, or favoring by the United States Government or any agency thereof, or the Regents of the University of California. The views and opinions of authors expressed herein do not necessarily state or reflect those of the United States Government or any agency thereof or the Regents of the University of California.

LBL-35402
UC-350

Improving the Thermal Performance of the U.S. Residential Window Stock

Richard E. Brown, Dariush K. Arasteh, and Joseph H. Eto

Energy and Environment Division
Lawrence Berkeley Laboratory
University of California
Berkeley, California 94720

May 1992

This work was supported by the Assistant Secretary for Conservation and Renewable Energy, Office of Building Technologies of the U.S. Department of Energy under Contract No. DE-AC03-76SF00098.

LBL 35402.

Improving the Thermal Performance of the U.S. Residential Window Stock

Richard E. Brown, Dariush K. Arasteh and Joseph H. Eto,
Lawrence Berkeley Laboratory

Windows have typically been the least efficient thermal component in the residential envelope, but technology advances over the past decade have helped to dramatically improve the energy efficiency of window products. While the thermal performance of these advanced technology windows can be easily characterized for a particular building application, few precise estimates exist of their aggregate impact on national or regional energy use. Policy-makers, utilities, researchers and the fenestration industry must better understand these products' ultimate conservation potential in order to determine the value of developing new products and initiating programs to accelerate their market acceptance. This paper presents a method to estimate the conservation potential of advanced window technologies, combining elements of two well-known modeling paradigms: supply curves of conserved energy and residential end-use forecasting. The unique features include: detailed descriptions of the housing stock by region and vintage, state-of-the-art thermal descriptions of window technologies, and incorporation of market effects to calculate achievable conservation potential and timing. We demonstrate the methodology by comparing, for all new houses built between 1990 and 2010, the conservation potential of very efficient, high R-value "superwindows" in the North Central federal region and spectrally-selective low-emissivity (moderate R-value and solar transmittance) windows in California.

Introduction

New window technologies developed over the last decade promise dramatic improvements in the thermal performance of residential windows. Technological advances have taken place on many fronts, and the myriad possible combinations result in a bewildering array of new window products. For this reason, the National Fenestration Rating Council is developing a thermal rating system to help consumers, builders, state officials, and utilities to gauge and compare the energy performance of residential fenestration products. This rating system is an important step in the development of residential window systems because it allows comparison of alternative window products strictly on the grounds of energy efficiency. The new window technologies, however, present somewhat of a paradox in that researchers have studied the thermal performance of individual windows in great detail (for example, Arasteh et al. 1985 & 1989), yet estimates of the expected societal energy savings from these technologies have not been conducted at nearly the same level of detail. Evaluation of window performance must go beyond simply specifying the intrinsic properties of the individual unit (such as U-value and shading coefficient) to address the extensive properties (such as market penetration of particular designs and energy savings in particular house types and climates) determining the society-wide energy conservation potential. Lack of information in this area prevents several subsequent analyses of advanced window technologies, including: (1) evaluation of policies, such as building codes or energy efficiency standards, on the state and federal level, (2) planning of utility demand-side management programs, (3) providing guidance to window technology development efforts, and (4) helping window manufacturers concentrate their research and design efforts on the most appropriate energy-efficient products. Moreover, the rapid pace of progress in window technologies deters many interested organizations from attempting to estimate the potential energy savings from windows. For all these reasons, the Windows and Daylighting Group at Lawrence Berkeley Laboratory (LBL) has undertaken the development of such an analysis capability. This paper traces the first tasks in that development effort. Although past conservation potential studies have dealt with advanced technology windows, this methodology is unique because it maintains a detailed description of the housing stock by region and vintage, includes state-of-the-art thermal descriptions of window technologies, and incorporates market effects to calculate achievable conservation potential and timing.

Window Technology Review

The last decade has produced a wide variety of technological options for controlling heat transfer and solar gains through windows without reducing visual clarity. Manual or automatically controlled insulating shades have

been replaced by transparent (to the human eye) low-emissivity coatings which can either transmit solar energy like clear glass (for heating dominated applications) or minimize "invisible" solar heat gains (for cooling dominated applications). Air spaces in glazing cavities have been replaced with low-conductivity gas-fills to further increase the resistance to heat transfer. Thus, for the same number of glazing layers and minimal to moderate price increases, R-values can be two to three times higher than similar glazing systems manufactured ten years ago. In fact, glazing materials have progressed to the point where they are no longer the least efficient component in window systems. Thus, thermally conductive frame elements utilizing metallic components are being replaced with much more insulating materials such as vinyl and fiberglass. Taken together, the materials and design improvements illustrated in Figure 1 have revolutionized the thermal performance of windows.

Energy Conservation Potential

In the past, analysts have estimated energy conservation potential from two distinct perspectives: technology or economic modeling. As the name suggests, technology models are based on the assumption that energy-use technologies are the key determinant of energy consumption. These models therefore concentrate on individual energy-efficiency technologies and their physical performance, while treating behavioral aspects of energy use as an exogenous input. This allows precise estimates of energy savings at the level of the individual appliance or house, while sacrificing some detail in the larger demographic, economic, and behavioral trends affecting an entire population[1]. Economic models, on the other hand, are based on the premise that economic processes (be they macroeconomic, such as national income; or microeconomic, such as consumer decision-making) lie at the heart of energy use. These models typically view technologies not as discrete and identifiable components, but rather as a continuous spectrum defined only by an energy-efficiency index (e.g., coefficient of performance) and cost. This technology representation frees the analysis of engineering minutiae and allows technological tradeoffs to be modeled as an economic decision process--at the expense of some loss of precision in describing the energy savings and costs of a given technology. The advantage of these models is that they explicitly treat economic behavior as the means by which the market influences energy efficiency. For this reason, the economic modeling paradigm is used most widely where "large-scale" economic trends are important in forecasting energy end-use, such as at government agencies, national laboratories and utilities. This project draws on both types of modeling techniques because we are concerned with the detailed performance of a particular technology class (i.e., windows) while at the same time mindful of the larger economic factors which influence the adoption of these technologies.

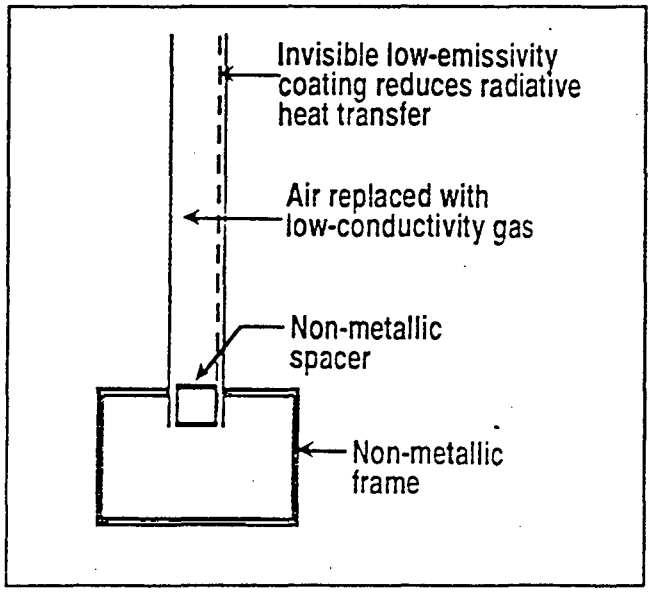

Figure 1. State-of-the-Art Window Technologies

Window Conservation Potential Model

Although our modeling goals were somewhat different than past efforts, we have drawn on existing models as much as possible to avoid redundancy and save effort. The result is a modular model, illustrated schematically in Figure 2, integrating several of these existing models.

To distinguish this new model from other end-use models, we call it the Window Conservation Potential (WCP) model.

Model Design. The housing stock is a dynamic entity, of which windows are only one component. Therefore, although the WCP model is primarily concerned with the energy effects of windows, it must model all aspects of the housing stock in order to accurately forecast the conservation potential of advanced technology windows and differentiate the effects of window changes from the other evolutionary changes taking place in the housing stock. "Non-window" factors of interest include the number of houses in the housing stock, building shell thermal integrity (of which windows are one component), internal thermal loads, and HVAC equipment efficiencies--all of which are readily available from residential end-use forecasting models. By using an existing forecasting model to provide these inputs, we avoid redundant

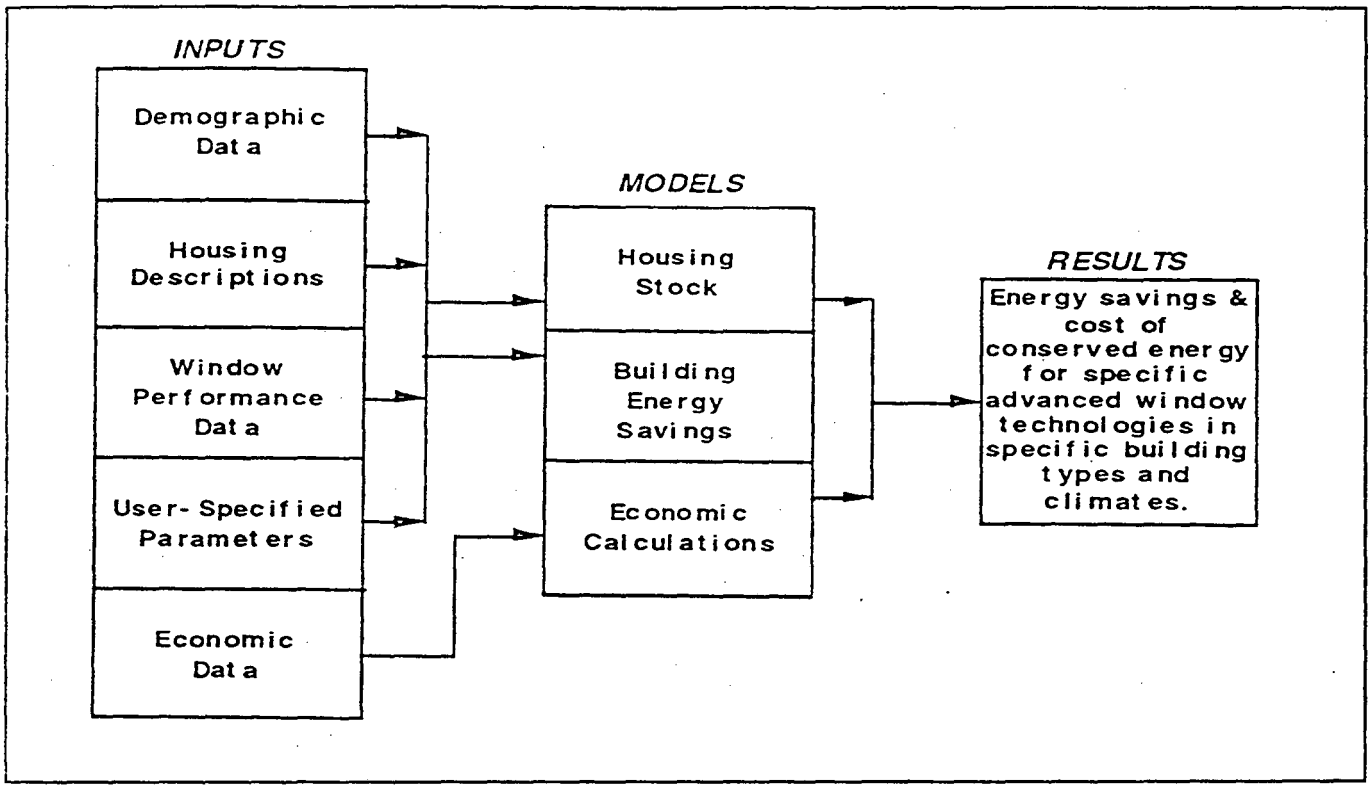

Figure 2. Schematic Diagram

forecasts and remove a significant modeling load from the WCP model. We currently use the LBL Residential Energy Model (LBL-REM) (McMahon 1986, U.S. DOE 1989b) to provide demographic inputs.

The "Housing Descriptions" inputs shown in Figure 2 consist of prototype houses representing the average house characteristics within each sector of the housing stock (a sector is defined by a unique combination of region, vintage, house type, and heating fuel). These data are derived from several sources. For existing houses the average thermal shell characteristics are derived from the U.S. DOE Residential Energy Consumption Survey (RECS) (U.S. DOE 1989a). For new houses we use the prototype thermal shells defined in Koomey et al. 1991a. To complete the prototype definitions, LBL-REM forecasts non-thermal shell prototype parameters such as space conditioning equipment efficiencies and internal thermal loads. Based on these prototype house inputs, we then use the PEAR space conditioning energy model (Huang et al. 1987) to calculate annual space conditioning energy consumption for each building prototype, from which we determine energy savings by subtracting energy consumption for the same prototype with advanced technology windows[2]. No attempt has been made in this project to calibrate the PEAR results, although uncertainty in the thermal load model is expected to be much less than for the statistical procedures used to generate the housing prototypes.

The current version of the WCP model uses a spreadsheet to combine the housing stock data from LBL-REM and the energy savings calculated by PEAR, thus calculating the society-wide energy savings for a particular window technology installed in a specific population of houses. However, this technical conservation potential--assuming that the entire stock is converted to efficient windows--is a limiting case for the analyses we wish to conduct. To address the temporal aspect of conservation, we model an annual retrofit rate which determines the extent to which the existing window stock has been converted to advanced technologies. Other market effects can be modeled through adjustment of the new window technology market penetration. Currently, the market penetration is estimated exogenously, but in the future we plan to more explicitly model the economic factors determining market penetration. Finally, the WCP model calculates economic indicators for the window technology of interest (such as cost of conserved energy or benefit/cost ratio) using advanced window technology cost data, in conjunction with the energy savings calculated previously. These measures

provide information on the cost-effectiveness of window technologies in specific applications.

Window Characteristics. Past efforts at estimating window conservation potential lacked sufficient data on current window characteristics for use in measuring energy savings realized through conversion to advanced technology windows. As part of this modeling effort, we examined potential data sources to determine if sufficient data are available to specify a window baseline. Table 1 presents the window parameters needed for the WCP model, as well as the best data sources for each parameter. We do not present the data themselves because they are disaggregated by region, house type, and heating equipment, and thus too voluminous to present here. The data on windows in new houses are sufficient to support very accurate conservation potential estimates, while for existing homes the window descriptions are lacking certain data. We can compensate for these omissions by assuming reasonable values. Another important finding regarding the window industry is that approximately one-half of all new windows sold are used in retrofit applications, indicating that the retrofit market may indeed offer a large potential for the adoption of energy-efficient windows (AAMA 1988).

Case Study

In order to exercise the WCP model, we compared the conservation potential for two advanced window technologies installed in all new homes built between 1990 and 2010 in two different regions. Specifically, we calculated the potential energy savings for spectrally-selective windows (incorporating a specialized low-e coating which reflects incident solar infrared radiation while still transmitting visible light, thus limiting solar heat gain and cooling load) in California and superwindows in the North Central federal region (Colorado, Montana, North Dakota, South Dakota, Utah, and Wyoming). The details of the window technologies and housing prototypes are shown in Table 2.

The advanced technology windows in Table 2 represent typical designs for these general window classes, from

Table 1. Baseline Window Data Sources

	New Houses	Existing Houses
Glazing Construction	Koomey et al. 1991a, AAMA 1988[1]	U.S. DOE 1989a
- # of Layers	AAMA 1988	NA
- Glazing Material	Koomey et al. 1991a, AAMA 1988	NA
- Frame Material		
Household Glazing Area[2]	U.S. DOE, 1989a	U.S. DOE, 1989a
- # of Windows	Not collected nationally[3]	NA[4]
- Avg. Window Size	Harris 1991, Fenestration Mag. 1989[5]	Huang et al. 1987[6]
- Window-to-Floor Area Ratio		

NA = Not Available.

[1]The AAMA report covers all new windows sold, including those for new construction ("new houses") and retrofit/replacement.

[2]In order to determine the household glazing area, two approaches are possible: either directly by multiplying the average window size by the average number of windows per house, or indirectly via data gathered on the window-to-floor area ratio. Owing to a lack of data on average window size, the latter approach is the only feasible.

[3]Some data are collected regionally: Avg. new window size is 16 sq. ft. in Oregon (Curtis 1991), 18 sq. ft. in California (Bennet 1991).

[4]Avg. double-hung window size is approximately 12 sq. ft. (Curtis 1991).

[5]1980s construction in the Northwest: 13% window-to-floor area ratio (Harris 1991); avg. new single-family house: 20% (Fenestration Magazine 1989).

[6]Traditional assumption for window-to-floor area ratio is 10%.

Table 2. Case Study Prototype House Parameters

	California Spectrally-Selective (Solar Spectrum Low-e, Gas-Filled, Non-Alum. Frame)	North Central Superwindow (3 Layers, 2 Low-e, Optimal Gas Fill, Advanced Frame)
Advanced Technology Windows		
-U-Value[1]	0.35	0.12
(Btu/hr•sq ft•°F)	0.5	0.7
- Shading Coefficient	0.1	0.05
- Leakage (CFM/lf)		
Current Practice		
- U-Value	0.80	0.50
- Shading Coefficient[2]	0.90	0.85
- Leakage	0.25	0.15
Building Prototype		
- Floor Area (sq. ft.)	~2000	1700
- Window Area[3] (% of Floor Area)	18%	14%
1990 Housing Starts[4]	~230,000	~40,000
Prototype Location	Livermore, CA	Great Falls, MT

[1]Center of glass.
[2]No external shading assumed. Shading coefficient is combined glazing/interior drape, as described in Huang et al. 1987.
[3]Windows are evenly distributed in all four cardinal directions.
[4]Housing starts for California are from CEC 1991; North Central Federal Region are from LBL-REM.

which the numerical values in the table have been calculated using methodologies described in Arasteh et al. 1985. For "current practice" windows, the glazing characteristics are derived from Koomey et al. 1991a, assuming that the glazing material is clear glass. The leakage parameter is an LBL estimate based on experience with laboratory testing of windows.

As this case study is a projection of future savings for technologies which are now only entering the market, we assumed a gradual acceptance into the market for both technologies. The "base case" market penetration--in which the technologies enter the market through natural diffusion processes--starts at 0% market share in 1990 and increases to 25% in 2005 (both technologies have equal penetration). We derived this diffusion rate through analogy to similar technologies (not necessarily windows). In addition, we modeled a "policy" case in which undefined government or utility policies strongly promote the acceptance of the technologies, leading to 90% market penetration in 2005. Figure 3 presents the results of this case study--new window technologies can reduce annual space conditioning energy consumption in the year 2010 by 2-4% if no policies are enacted and by 5-25% as a result of policies. The variation between climates and end-uses are due to the nature of the particular technologies--for instance, superwindows do very little to reduce cooling load. The results show that the advanced technologies are effective at their designed tasks: spectraliy-selective windows reduce the cooling load in California, and superwindows reduce heating load in the North Central region.

When aggregated over an entire population of houses, the total energy savings differ dramatically between regions. As illustrated in Figure 4, the technologies save comparable amounts of energy for their intended applications--i.e., cooling in California and heating in the North Central region. However, these effects are dwarfed by the magnitude of heating savings in California, due mainly to the fact that heating load in the prototypical California climate

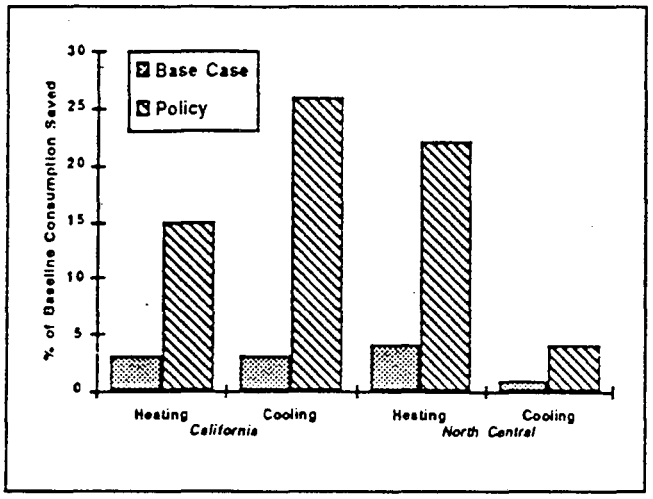

Figure 3. Fraction of Annual Baseline Consumption Saved in 2010

is larger than the cooling load (hence per-house energy savings are relatively much higher for heating than for cooling), and the stock of houses is much larger in California than the North Central region.

Last, we examined the cost-effectiveness of the technologies through the benefit/cost ratio, defined as the ratio of annual energy savings (in dollar terms) to annualized capital cost. A benefit/cost ratio greater than 1 indicates that an investment is cost-effective. We calculated these results using a 7% real discount rate, 30 year window lifetime, and 1988 energy prices as documented in U.S. DOE 1989c and 1990. Because we examined new construction, advanced technology window capital costs are taken to be the incremental costs over the "current practice" windows described in Table 2. We assume that spectrally-selective windows cost the same as current low-e, gas-filled windows, as documented in Koomey et al. 1991a. Superwindow costs are LBL estimates of the expected 1995 cost premium over and above the cost of low-e, gas-filled windows. Figure 5 shows that in both regions and for all fuel types the benefit/cost ratio exceeds 1, particularly in the case of electrically-heated homes. Thus the technologies evaluated are good investments for new construction in these regions.

Summary

Energy efficient window technologies have been in laboratory development for several years and are now widely available on the market. For this reason, many organizations--both government and private--need quantitative information as to the potential energy savings from these windows in order to determine policies and research priorities. The methodology described here has been developed to better understand the effect of advanced technology windows and thereby provide the information these organizations require. The WCP model forecasts the energy savings expected to occur for specific window technologies installed in specific groups of houses. Although similar analyses have been conducted in the past, this analysis includes several unique features: (1) detailed descriptions of the housing stock by region and vintage, (2) state-of-the-art thermal descriptions of window technologies, and (3) incorporation of market effects to calculate achievable conservation potential and timing.

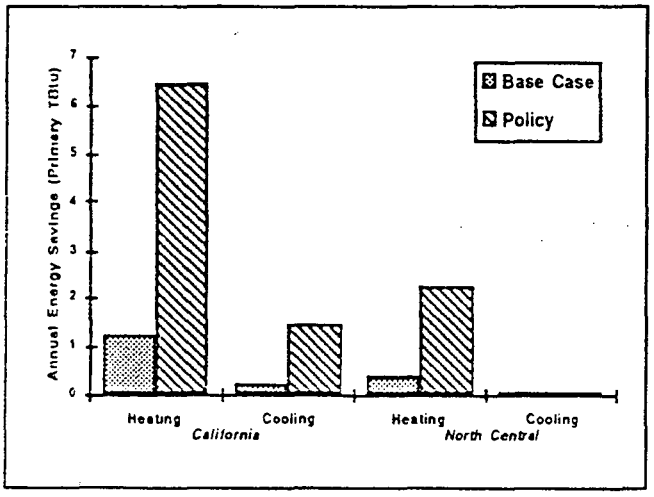

Figure 4. Annual Energy Savings in 2010 due to Advanced Technology Windows (1TBtu = 10^{-3} Quads)

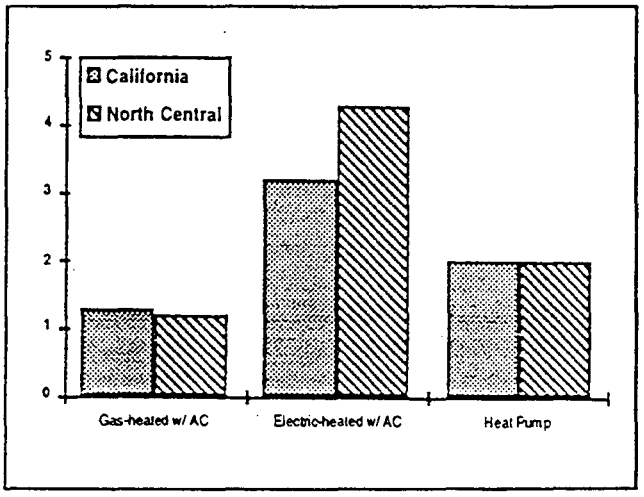

Figure 5. Benefit/Cost Ratio for Advanced

Analyses such as we have described in this report will advance both the research of advanced window technologies and their acceptance into the market. Conservation potential estimates allow government agencies and utilities to promote those technologies which are most effective, and identify the policies which will bring about the greatest energy savings. For governmental agencies, these policies include window labeling legislation, energy-efficiency standards, and building codes. For utilities, policies include purchase rebate and housing retrofit programs. Conservation estimates also allow window technology researchers to concentrate their effort on those technologies which show the greatest potential for energy savings.

This analysis employed an initial version of the WCP model. The results show that advanced window technologies can save a substantial amount of energy (up to 25% of baseline consumption) and are cost-effective, as evidenced by a benefit/cost ratio greater than one in both climate zones and for all fuels examined. In the future, we plan to upgrade the model by: (1) incorporating space conditioning consumption models more appropriate to advanced window technologies (such as RESFEN or even simplified versions of DOE-2), (2) further integration with residential energy end-use forecasting models, and (3) further analysis to better define the window characteristics of prototype houses.

While the example presented in this paper focused on new construction, it is important to note that with the current development of advanced window products and expected availability of "superwindows" for all climates in the next several years, window retrofits offer a large potential for energy conservation. The window conservation potential model described here will provide important insights as to the most effective technologies and policies for realizing the potential of advanced window technologies. By estimating energy savings for society as a whole, we are able to address a different class of analysis than have past window models. At the same time, we are able to address questions relating to specific technologies or groups of houses, something that other energy conservation potential models have not done. Thus the window analysis tool fulfills a unique niche in the energy conservation analysis field.

Acknowledgements

This work was supported by the Assistant Secretary for Conservation and Renewable Energy, Office of Building Technologies of the U.S. Department of Energy under Contract No. DE-AC03-76SF00098.

Endnotes

1. A well-known type of technology model is the supply curve of conserved energy methodology. The best recent example of this work is Koomey, et. al 1991b. This analysis indirectly incorporates some of the important dynamic economic influences by using demographic input parameters estimated by a residential end-use forecasting model.

2. An updated version of the PEAR model which focuses specifically on windows--RESFEN--is available in beta-test form (Sullivan 1991), and will be used in the WCP model when more widely available. RESFEN was specifically developed to model the impacts of advanced window technologies in single family homes. Multifamily space conditioning loads are modeled through other means.

References

AAMA 1988. *Study of the Residential Window and Skylight Market.* American Association of Architectural Manufacturers. Des Plaines, IL. 1988.

Arasteh, D., S. Selkowitz, and J. Hartmann 1985. *Detailed Thermal Performance Data on Conventional and Highly Insulating Window Systems.* ASHRAE Transactions, 91(1). 1985.

Arasteh, D., S. Selkowitz, and J. Wolfe 1989. *The Design and Testing of a Highly Insulating Glazing System for Use with Conventional Window Systems.* Journal of Solar Energy Engineering. Transactions of the ASME, Vol III, February 1989.

Bennet, Lou 1991. Personal communication. California Association of Window Manufacturers. June 1991.

CEC 1991. *Staff Electricity Report 1992 preliminary forecast filings.* California Energy Commission. Sacramento, CA. 1991.

Curtis, Gary 1991. Personal Communication. Average window size used in retrofit applications and new construction. Oregon Department of Energy. June, 1991

EAP 1987. *PEAR 2.1. Program for Energy Analysis of Residences Microcomputer Program. User's Manual.* Energy Analysis Program (EAP). Lawrence Berkeley Laboratory. PUB-610. March, 1987.

Fenestration Magazine 1989. "Proposed Residential Design Standard Could Hurt Fenestration Industry." *Fenestration Magazine.* July/August, 1989. p. 8.

Harris, Jeff 1991. Personal communication. Data from "Residential Construction Demonstration Program" conducted by Bonneville Power Authority. Northwest Power Planning Council. July, 1991.

Huang, Y.J., R. Ritschard, J. Bull, S. Byrne, I. Turiel, D. Wilson, C. Hsui, and D. Foley 1987. *Methodology and Assumptions for Evaluating Heating and Cooling Energy Requirements in New Single-Family Residential Buildings. Technical Support Document for the PEAR Microcomputer Program.* Lawrence Berkeley Laboratory. LBL-19128. January, 1987.

Koomey, Jonathon G., James McMahon, Cheryl Wodley 1991a. *Improving the Thermal Integrity of New Single-Family Detached Residential Buildings: Documentation for a Regional Database of Capital Costs and Space Conditioning Load Savings.* Lawrence Berkeley Laboratory. LBL-29416. July, 1991.

Koomey, J.G., C. Atkinson, A. Meier, J. McMahon, S. Boghosian, B. Atkinson, I. Turiel, M.D. Levine, B. Nordman, and P. Chan 1991b. "The Potential for Electricity Efficiency Improvements in the U.S. Residential Sector." Lawrence Berkeley Laboratory. LBL-30477. July 1991.

McMahon, James E. 1986. *The LBL Residential Energy Model.* Lawrence Berkeley Laboratory. LBL-18622. January, 1986.

Sullivan, Robert 1991. *Draft: RESFEN 1.0: A Prototype PC Program for Calculating Residential Fenestration Heating and Cooling Energy Use and Cost.* Windows and Daylighting Group. Lawrence Berkeley Laboratory. January 1991.

U.S. DOE 1989a. *Residential Energy Consumption Survey: Housing Characteristics 1987.* Energy Information Administration. U.S. Department of Energy. DOE/EIA-0314(87). May 1989.

U.S. DOE 1989b. *Technical Support Document: Energy Conservation Standards for Consumer Products: Dishwashers, Clothes Washers, and Clothes Dryers.* Appendix B. U.S. Department of Energy, Assistant Secretary, Conservation and Renewable Energy, Building Equipment Division. DOE/CE-0267. July 1989.

U.S. DOE 1989c. *Electric Power Annual 1988.* Energy Information Administration. U.S. Department of Energy. DOE/EIA-0348(88). December 1989.

U.S. DOE 1990. *Natural Gas Annual 1989.* Energy Information Administration. U.S. Department of Energy. DOE/EIA-0131(89). September 1990.

LAWRENCE BERKELEY LABORATORY
UNIVERSITY OF CALIFORNIA
TECHNICAL INFORMATION DEPARTMENT
BERKELEY, CALIFORNIA 94720

AAS980
LBL Libraries